LEWIS RIVER HATCHERY IMPLEMENTATION
POND 13–14 MODIFICATIONS

APRIL 2009

LOCATION MAP

0 10

SCALE: 1" = 5 MILES'

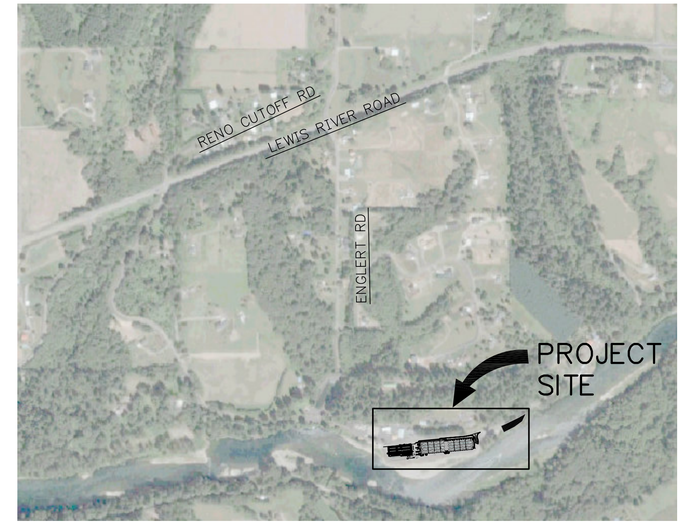

VICINITY MAP

0 200 1200

SCALE: 1" = 600'

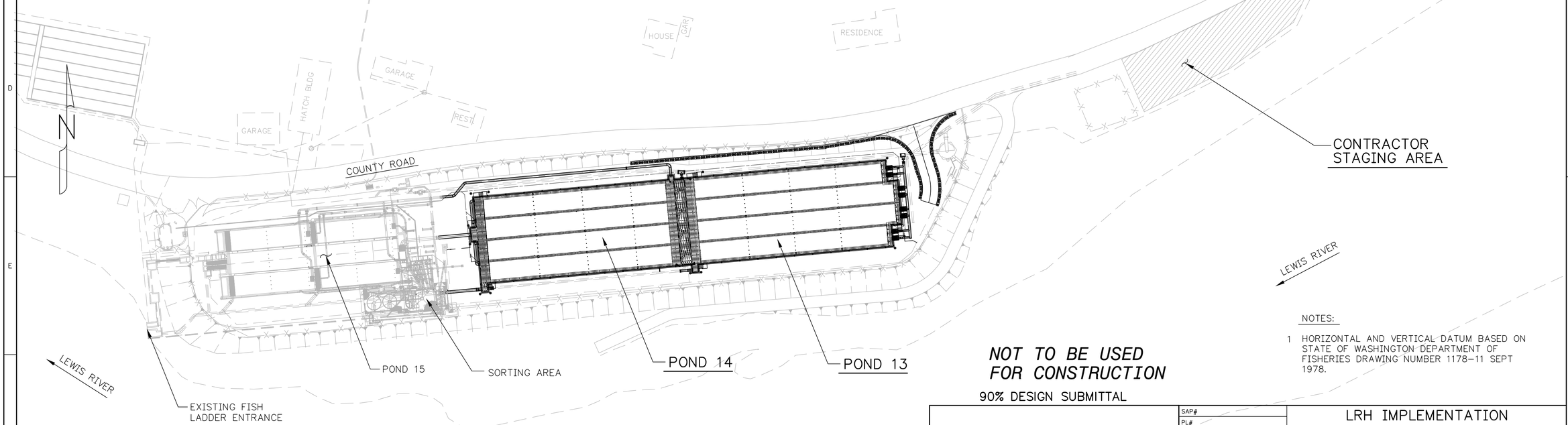

NOTES:

1 HORIZONTAL AND VERTICAL DATUM BASED ON STATE OF WASHINGTON DEPARTMENT OF FISHERIES DRAWING NUMBER 1178–11 SEPT 1978.

NOT TO BE USED FOR CONSTRUCTION

90% DESIGN SUBMITTAL

OVERALL SITE PLAN
PONDS 13–14

0 20 100

SCALE: 1" = 50'

0 1"

BAR MEASURES ONE INCH ON ORIGINAL DRAWINGS

Resource Consultants, Inc.
REDMOND, WA.

SAP#	
PL#	
DATE	1–16–09
ENG	DPT/R2
DES	DPT/R2
DR	JES/R2
CH	
APPROVAL	

LRH IMPLEMENTATION
POND 13–14 MODIFICATIONS
GENERAL PLAN AND
COVER SHEET

PACIFICORP ENERGY
A PACIFICORP COMPANY

HYDRO

SCALE: AS SHOWN | SHEET 001 | 116100 | REV.

No.	DATE	REVISION	BY	CHK	APP	DRAWING No.	REFERENCE DRAWINGS

PLOT SCALE: 1 =

PLOTTED: 4/15/2009 2:30:39 PM
SAVED:
CYONET ID:

D161578

INDEX OF DRAWINGS

SHT	TITLE
	GENERAL
001	GENERAL PLAN AND COVER SHEET
002	INDEX OF DRAWINGS
003	PROJECT PLAN
004	SYMBOLS AND ABBREVIATIONS
005	PIPING AND VALVE SCHEDULES
006	PROCESS FLOW DIAGRAM – I
007	PROCESS FLOW DIAGRAM – II
	CIVIL
008	GENERAL CIVIL DETAILS – I
009	GENERAL CIVIL DETAILS – II
010	GENERAL CIVIL DETAILS – III
011	EXISTING SITE PLAN
012	TESC AND CONSTRUCTION STAGING PLAN
013	DEMOLITION PLAN – I
014	DEMOLITION PLAN – II
015	DEMOLITION PLAN – III
016	DEMOLITION PLAN – IV
017	PAVING AND GRADING – PLAN – I
018	PAVING AND GRADING – PLAN – II
019	YARD PIPING – PLAN – I
020	YARD PIPING – PLAN – II
021	VACUUM CLEANING STATION – PLAN AND SECTIONS
022	VAULT – I
023 *	PIPING – PROFILES
024 *	PIPING – PROFILES
025 *	PIPING – PROFILES
	STRUCTURAL
026	STRUCTURAL NOTES
027	GENERAL STRUCTURAL DETAILS
028	P14 FOUNDATION PLAN
029	P13 FOUNDATION PLAN

SHT	TITLE
	STRUCTURAL
030	POND 14 – DECK PLAN
031	POND 13 – DECK PLAN
032	GENERAL STRUCTURAL SECTION
034	POND 13/14 – SECTIONS – I
035	POND 13/14 – SECTIONS – II
036	POND 13 – SECTIONS – III
037	POND 13/14 – SECTIONS – IV
038	POND 13 – SECTIONS – V
039	POND 14 – DRAIN CHANNEL – DECK PLAN & FLOOR PLAN
040	POND 14 – DRAIN CHANNEL – SECTIONS – I
041	POND 14 – DRAIN CHANNEL – SECTIONS – II
042	P14 – REUSE CHANNEL & P13 DRAIN CHANNEL DECK PLAN
043	P14 – REUSE CHANNEL & P13 DRAIN CHANNEL FLOOR PLAN
044	P14 – REUSE CHANNEL & P13 DRAIN CHANNEL SECS – I
045	P14 – REUSE CHANNEL & P13 DRAIN CHANNEL SECS – II
046	P13A – INLET CHANNEL DECK PLAN & FLOOR PLAN
047	P13B – INLET CHANNEL DECK PLAN & FLOOR PLAN
049	SCREENS – I
050	SCREENS – II
051	REMOVABLE GRIP STRUT OVER GUIDES
052	P14 REUSE WELL – PLAN AND SECTONS
053	P14 DRAIN WELL – PLAN AND SECTIONS
054	P13 DRAIN WELL – PLAN AND SECTIONS
055	P15 REUSE WELL – PLAN AND SECTIONS
056	MISCELLANEOUS DETAILS – I
057 *	GUIDE DETAILS – I
058 *	GUIDE DETAILS – II
059 *	GUIDE DETAILS – III
062	BIRD NETTING
063	BIRD NETTING DETAILS
	ELECTRICAL
070 *	ELECTRICAL SYMBOLS AND ABBREVIATIONS
071 *	ELECTRICAL ONE LINE DIAGRAM PANEL SCHEDULE AND DEMAND CALC
072 *	POND 13–14 – AREA PLAN
073 *	SORTING FACILITY – PLAN & ELEVATIONS
074 *	COUNTING BOARD WIRING DIAGRAM – ELEVATION & DETAILS

* INDICATES NOT INCLUDED IN THIS SUBMITTAL

NOT TO BE USED
FOR CONSTRUCTION

90% DESIGN SUBMITTAL

0 1"

BAR MEASURES ONE INCH
ON ORIGINAL DRAWINGS

Resource Consultants, Inc.
REDMOND, WA.

SAP#	
PL#	
DATE 1–16–09	
ENG DPT/R2	DES DPT/R2
DR JES/R2	CH
APPROVAL	

LRH IMPLEMENTATION
POND 13–14 MODIFICATIONS
INDEX OF DRAWINGS

PACIFICORP ENERGY
A PACIFICORP COMPANY

HYDRO

SCALE: AS SHOWN | SHEET 002 | 116100 | REV.

PLOTTED: 4/15/2009 2:31:00 PM
SAVED:
CVONET ID:

D161578

PLOT SCALE: 1 =

No.	DATE	BY	CHK	APP	REVISION	No.	DATE	BY	CHK	APP	REVISION	DRAWING No.	REFERENCE DRAWINGS	DRAWING No.	REFERENCE DRAWINGS

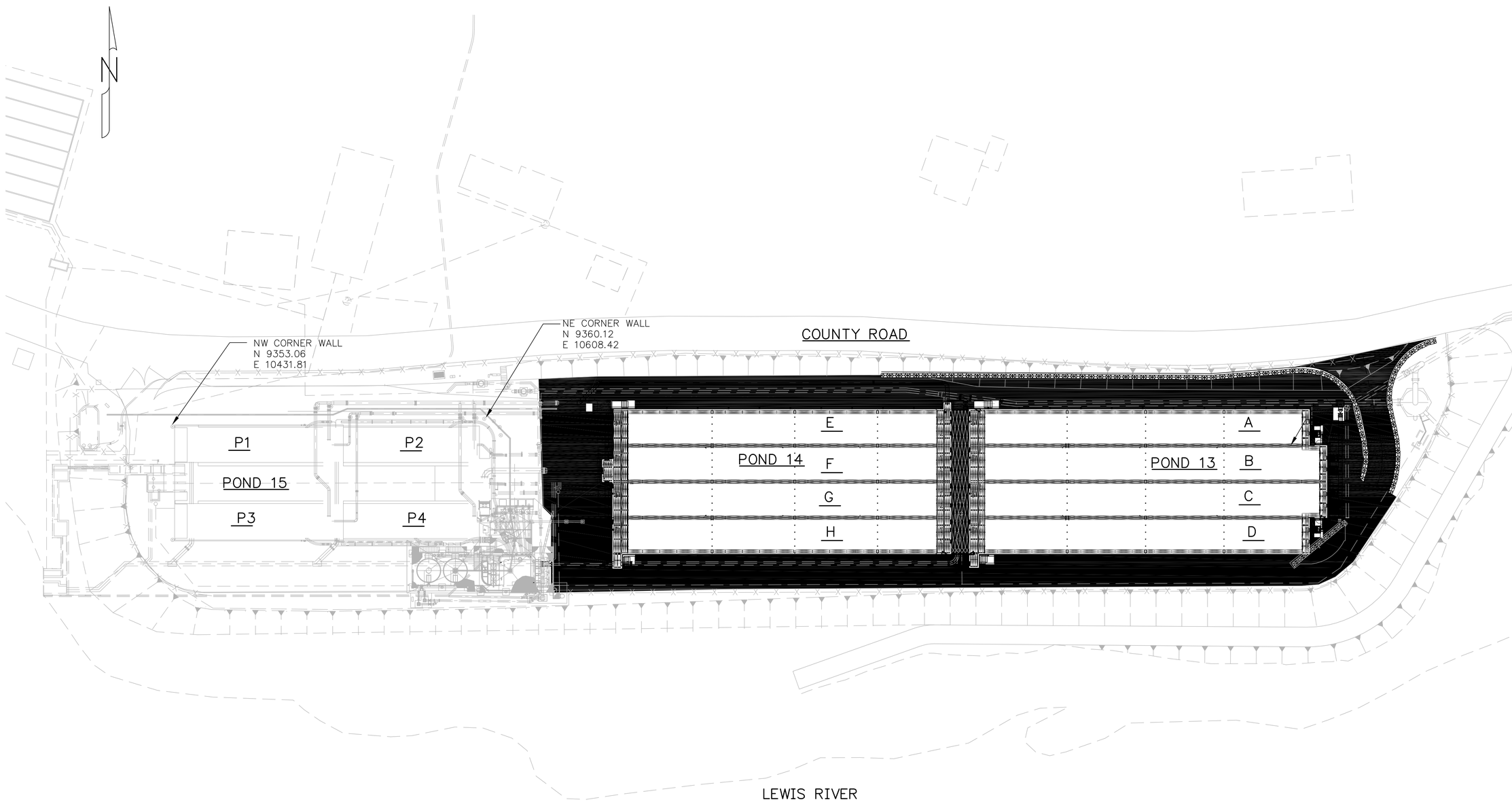

NOT TO BE USED
FOR CONSTRUCTION

90% DESIGN SUBMITTAL

PROJECT AREA PLAN

0 10 20 40

SCALE: 1" = 20'

0 1"

BAR MEASURES ONE INCH
ON ORIGINAL DRAWINGS

Resource Consultants, Inc.
REDMOND, WA.

SAP#	
PL#	
DATE 1-16-09	
ENG DPT/R2	DES DPT/R2
DR JES/R2	CH
APPROVAL	

LRH IMPLEMENTATION
POND 13-14 MODIFICATIONS
PROJECT
PLAN

PACIFICORP ENERGY
A PACIFICORP COMPANY

HYDRO

SCALE: 1"=20' | SHEET 003 | 116100 | REV.

No.	DATE	REVISION	BY	CHK	APP

No.	DATE	REVISION	BY	CHK	APP

DRAWING No.	REFERENCE DRAWINGS

DRAWING No.	REFERENCE DRAWINGS

PLOT SCALE: 1 =

PLOTTED: 4/15/2009 2:31:12 PM
SAVED:
CTGNET ID:

D161578

GENERAL SYMBOLOGY

- NEW CONSTRUCTION
- EXISTING
- FUTURE
- EXISTING TO BE REMOVED OR DEMOLISHED

MATERIAL SYMBOLOGY

- CONCRETE (PLAN AND SECTION)
- GROUT OR SAND (PLAN AND SECTION)
- BRICK (PLAN AND SECTION)
- CMU (PLAN AND SECTION)
- STEEL/METAL/FRP (SMALL SCALE SECTION)
- CHECKERPLATE OR SOLID FRP GRATING (PLAN)
- CHECKERPLATE (SECTION)
- GRATING (PLAN)
- GRATING OR SOLID FRP GRATING (SECTION)
- SAFETY GRATING (PLAN)
- SAFETY GRATING (SECTION)
- RAILING (PLAN)
- WOOD (PLAN OR ELEVATION)
- LUMBER/FRAMING – NOMINAL
- LUMBER – TRIMMED (BLOCKING OR SHIMS)
- OR — GLULAM (SECTION)
- GLULAM (ELEVATION)
- OR — PLYWOOD (SMALL SCALE)
- FINISHED GRADE
- GRAVEL/DRAINROCK/AGGREGATE BASE

VALVE AND GATE ACTUATORS

- DIAPHRAGM OPERATOR
- D = DIGITAL
  E/H = ELECTROHYDRAULIC
  P = PNEUMATIC
  S = SOLENOID
  T = TEMPERATURE
- HAND / MANUAL OPERATOR
- M — MOTOR OPERATOR
- PRESSURE REGULATOR WITH EXTERIOR TAP
- PRESSURE REGULATOR (SELF CONTAINED)
- PRESSURE RELIEF OR SAFETY ACTUATOR
- WEIGHT BALANCED OPERATOR

VALVES

- 3 WAY MULT–PORT VALVE
- 4 WAY MULTI–PORT VALVE
- AIR VACUUM, AIR RELEASE, OR AIR VACUUM AND AIR RELEASE ASSEMBLY
- ANGLE VALVE
- ANGLE CHECK VALVE
- BACK–PRESSURE VALVE
- BACKFLOW PREVENTER VALVE
- BACKWATER VALVE
- BALL VALVE
- BALL CHECK VALVE
- BUTTERFLY VALVE
- CHECK VALVE
- CONE VALVE
- DIAPHRAGM VALVE
- ECCENTRIC PLUG VALVE
- FLAP VALVE
- GATE VALVE
- GLOBE VALVE
- HOSE BIBB VALVE FROM TOP, FRONT AND SIDE VIEW
- LUBRICATED PLUG VALVE
- NEEDLE VALVE
- PINCH VALVE
- OR — PRESSURE REGULATING VALVE
- PRESSURE RELIEF VALVE
- SILENT CHECK VALVE
- SLEEVE VALVE
- STOP CHECK VALVE
- TELESCOPING VALVE

GATES

- SLIDE GATE (CAST IRON, ALUMINUM OR STAINLESS STEEL)
- STOP GATE OR SHEAR GATE

FITTINGS AND ACCESSORIES

- DRAIN
- CENTRIFUGAL PUMP
- FLANGED ADAPTER – SET SCREW TYPE
- OR — FLEXIBLE CONNECTION
- FCO / FCO — FLOOR CLEANOUT
- FLOOR DRAIN
- FLOOR SINK
- HUB DRAIN
- INLINE MIXER
- MECHANICAL TYPE COUPLING
- PIPE SUPPORT (PLAN)
- PULSATION DAMPENER
- REDUCER – CONCENTRIC
- REDUCER – ECCENTRIC
- SLEEVE TYPE COUPLING
- STRAINER – WYE TYPE
- TRAP
- UNION
- WCO — WALL CLEANOUT
- WCO

ABBREVIATIONS

A	
AB	ANCHOR BOLT
ADA	AMERICANS WITH DISABILITIES ACT
AFF	ABOVE FINISHED FLOOR
ALT	ALTERNATE
ALUM	ALUMINUM
ANCH	ANCHOR
APPROX	APPROXIMATE
ATS	AUTOMATIC TRANSFER SWITCH
	AND
	AT
B	
BFV	BUTTERFLY VALVE
BM	BENCH MARK
BL	BASELINE
BLDG	BUILDING
BM	BEAM
BOT	BOTTOM
C	
CCP	CONCRETE CYLINDER PIPE
CI	CAST IRON
CCJ	CRACK CONTROL JOINT
℄	CENTERLINE
CLR	CLEAR
CLW	CLARIFIED WATER
CMP	CORRUGATED METAL PIPE
CMU	CONCRETE MASONRY UNIT
CO	CLEAN OUT
COL	COLUMN
CONC	CONCRETE
CONN	CONNECTION
CONST	CONSTRUCTION
CONSTJT	CONSTRUCTION JOINT
CONT	CONTINUOUS
CU	COPPER
CYL	CYLINDER
D	
DBL	DOUBLE
DCW	DOMESTIC COLD WATER
DEG	DEGREES
DI	DUCTILE IRON
DIA	DIAMETER
DIAG	DIAGONAL
DIP	DUCTILE IRON PIPE
DWG	DRAWING
E	
E	EAST, EASTING, ELECT. CONDUIT
EA	EACH
EF	EACH FACE
EL OR ELEV	ELEVATION
ELECT	ELECTRICAL
EQ	EQUAL
EW	EACH WAY
EXIST	EXISTING
EXP	EXPANSION
EXPJT	EXPANSION JOINT
EXT	EXTERIOR
F	
FD	FLOOR DRAIN
FE	FISH EFFLUENT
FEX	FIRE EXTINGUISHER
FF	FINISH FLOOR
FLR	FLOOR
FM	FLOW METER
FS	FLOW SWITCH
FM	FORCE MAIN
FRP	FIBERGLASS REINFORCED PLASTIC
FT	FOOT OR FEET
FTG	FOOTING
G	
GV	GATE VALVE
GA	GAUGE OR GAGE
GAL	GALLONS
GALV	GALVANIZED
GEN	GENERATOR
GPM	GALLONS PER MINUTE
GRTG	GRATING
GSP	GALVANIZED STEEL PIPE
H	
HB	HOSE BIB
HR	HANDRAIL
HDPE	HIGH DENSITY POLYETHYLENE
HK	HOOK
HORIZ	HORIZONTAL
HP	HORSEPOWER
I	
ID	INSIDE DIAMETER
IE	INVERT ELEVATION
IHS	IN HATCHERY SERVICE WATER
IN	INCH
INSUL	INSULATION
INT	INTERIOR
INV	INVERT
IP	DUCTILE IRON PIPE
IRR	IRRIGATION
J	
JB	J–BOX
JT	JOINT
K	
K	KIP (1000 POUNDS)
L	
LBS	POUND(S)
LF	LINEAL FEET
LG	LONG
LOC	LOCATION
M	
MASY	MASONRY
MAX	MAXIMUM
MECH	MECHANICAL
MH	MANHOLE
MIN	MINIMUM
MISC	MISCELLANEOUS
MJ	MECHANICAL JOINT
MON	MONUMENT
MS	MASTER SWITCH
N	
N	NORTH, NORTHING
NIC	NOT IN CONTRACT
NTS	NOT TO SCALE
NA	NOT APPLICABLE
NO	NUMBER
NOM	NOMINAL
O	
OC	ON CENTER
OD	OUTSIDE DIAMETER
OHWM	ORDINARY HIGH WATER MARK
OPP	OPPOSITE
P	
PA	POLLUTION ABATEMENT
PE	POLYETHYLENE
PERF	PERFORATED
PERP	PERPENDICULAR
PL	PLATE
PLCS	PLACES
PSI	POUNDS PER SQUARE INCH
PNL	PANEL
PRV	PRESSURE RELIEF VALVE
PSF	POUNDS PER SQUARE FOOT
PT	POINT
PVC	POLYVINYL CHLORIDE
PVMNT	PAVEMENT
R	
R OR RAD	RADIUS
RC	REINFORCED CONCRETE
RCP	REINFORCED CONCRETE PIPE
RD	ROAD
RED	REDUCER
REF	REFERENCE
REINF	REINFORCING
REQD	REQUIRED
REW	REUSE WATER
RW	RAW WATER
S	
S	SOUTH
SS	STAINLESS STEEL
SW	SURFACE WATER
SCH	SCHEDULE
SD	STORM DRAIN
SHT	SHEET
SIM	SIMILAR
SPA	SPACES, SPACING
SPEC	SPECIFICATION
SQ	SQUARE
STA	STATION
STD	STANDARD
STIFF	STIFFENER
STL	STEEL
STRUCT	STRUCTURAL
SW	SWITCH
SW	SERVICE WATER
SYMM	SYMMETRICAL
T	
TOC	TOP OF CONCRETE
TS	TOE OF SLOPE
THK	THICK
TYP	TYPICAL
U	
UHMW	ULTRA HIGH MOLECULAR WEIGHT
UNO	UNLESS NOTE OTHERWISE
UG	UNDERGROUND
V	
VERT	VERTICAL
VLV	VALVE
W	
W	WATER, WEST, OR WIDE
W	WITH
WS	WATER SURFACE
WO	WITHOUT
WSP	WELDED STEEL PIPE
WD	WOOD
WWF	WELDED WIRE FABRIC
Y	
YD	YARD

REFERENCE SYMBOLS

SECTION IDENTIFICATION

SECTION LETTER

A / 005 — SHEET ON WHICH SECTION IS SHOWN

SECTION A / 001 — SHEET ON WHICH SECTION IS CUT

DETAIL IDENTIFICATION

DETAIL NUMBER

1 / 005 — SHEET ON WHICH DETAIL IS SHOWN

DETAIL 1 / 001 — SHEET ON WHICH DETAIL IS CALLED–OUT

MISCELLANEOUS SYMBOLS

- BENCH MARK CONTROL
- BENCH MARK CONTROL
- ROUND OR DIAMETER
- WATER SURFACE
- ANGLE
- CHANGE IN MATERIAL
- CONTROL POINT ELEVATION

FOR WELDING SYMBOLS USE AMERICAN WELDING SOCIETY STANDARD SYMBOLS.

90% DESIGN SUBMITTAL

NOT TO BE USED FOR CONSTRUCTION

Resource Consultants, Inc.
REDMOND, WA.

SAP#	
PL#	
DATE 1–16–09	
ENG DPT/R2	DES DPT/R2
DR JES/R2	CH
APPROVAL	

LRH IMPLEMENTATION
POND 13–14 MODIFICATIONS
SYMBOLS AND
ABBREVIATIONS

PACIFICORP ENERGY — HYDRO

SCALE: AS SHOWN | SHEET 004 | 116100 | REV.

No.	DATE	REVISION	BY	CHK	APP	PLOT SCALE: 1 =	REFERENCE DRAWINGS	DRAWING No.	REFERENCE DRAWINGS	DRAWING No.

PLOTTED: 4/15/2009 2:31:20 PM
SAVED:
CTONET ID:

D161578

BORDER REVISED 10/29/08 CJ&JJ

VALVE SCHEDULE

EQUIPMENT NUMBER	DESCRIPTION	TYPE	SIZE (IN)	OPERATOR	COMMENTS
V-1	P13 1ST PASS SUPPLY PIPELINE	CHECK	24		GLOBE STYLE
V-2	P14 1ST PASS SUPPLY PIPELINE	CHECK	24		GLOBE STYLE
V-3	P13A 1ST PASS SUPPLY PIPELINE	BUTTERFLY	18	AWWA NUT	
V-4	P13A 1ST PASS SUPPLY PIPELINE	BUTTERFLY	18	AWWA NUT	
V-5	P13B 1ST PASS SUPPLY PIPELINE	BUTTERFLY	18	AWWA NUT	
V-6	P13B 1ST PASS SUPPLY PIPELINE	BUTTERFLY	18	AWWA NUT	
V-7	P13C 1ST PASS SUPPLY PIPELINE	BUTTERFLY	18	AWWA NUT	
V-8	P13C 1ST PASS SUPPLY PIPELINE	BUTTERFLY	18	AWWA NUT	
V-9	P13D 1ST PASS SUPPLY PIPELINE	BUTTERFLY	18	AWWA NUT	
V-10	P13D 1ST PASS SUPPLY PIPELINE	BUTTERFLY	18	AWWA NUT	
V-11	P13E 1ST PASS SUPPLY PIPELINE	BUTTERFLY	18	AWWA NUT	
V-12	P13F 1ST PASS SUPPLY PIPELINE	BUTTERFLY	18	AWWA NUT	
V-13	P13G 1ST PASS SUPPLY PIPELINE	BUTTERFLY	18	AWWA NUT	
V-14	P13H 1ST PASS SUPPLY PIPELINE	BUTTERFLY	18	AWWA NUT	
V-15	P13 HIGH PRESSURE WATER TO EDUCTOR	GATE	2	AWWA NUT	
V-16	P14 HIGH PRESSURE WATER TO EDUCTOR	GATE	2	AWWA NUT	
V-17	P15 REUSE WELL DRAINAGE	MUD	6		
V-18	P15 REUSE WELL DRAINAGE	MUD	6		
V-20	EDUCTOR STATION	GATE	2	HANDWHEEL	
V-21	EDUCTOR STATION	GATE	2	HANDWHEEL	
V-22	EDUCTOR STATION	GATE	2	HANDWHEEL	
V-23	EDUCTOR STATION	GATE	2	HANDWHEEL	

GATE SCHEDULE

EQUIPMENT NUMBER	DESCRIPTION	OPERATION	TYPE	SIZE (IN)
G-1	P13A REUSE SUPPLY	AWWA NUT	CANAL	24
G-2	P13B REUSE SUPPLY	AWWA NUT	CANAL	24
G-3	P13C REUSE SUPPLY	AWWA NUT	CANAL	24
G-4	P13D REUSE SUPPLY	AWWA NUT	CANAL	24
G-5	P13 DRAIN	AWWA NUT	WEIR	50
G-6	P14E REUSE SUPPLY	AWWA NUT	CANAL	24
G-7	P14F REUSE SUPPLY	AWWA NUT	CANAL	24
G-8	P14G REUSE SUPPLY	AWWA NUT	CANAL	24
G-9	P14H REUSE SUPPLY	AWWA NUT	CANAL	24
G-10	P14 DRAIN	AWWA NUT	WEIR	50
G-11	REUSE TO P15 FROM P13	AWWA NUT	SLIDE	24
G-12	REUSE TO P14 FROM P15	AWWA NUT	SLIDE	24
G-13	REUSE CHANNEL DRAIN GATE	AWWA NUT	SLIDE	6

PIPE SCHEDULE

DESIGNATION	DESCRIPTION	SIZE (IN)	MATERIAL	SPEC	WALL THICKNESS	MINIMUM TEST PRESSURE	COATING	LINING
PVC-D	WATER DRAIN PIPING	8	PVC	02595	SDR 35	N/A	N/A	N/A
STL-S	WATER SUPPLY PIPING	18, 24, 36	WELDED STEEL	02570	A53	150	EPOXY	EPOXY
GS-UW	UTILITY WATER SUPPLY PIPING	2	GALVANIZED STEEL		SCH 40	150	GALVANIZED	GALVANIZED
STL-D	WATER DRAIN PIPING	24	WELDED STEEL	02570	A53	150	EPOXY	EPOXY
STL-RU	REUSE WATER PIPING	24	WELDED STEEL	02570	A53			
GS-V	VACUUM SYSTEM PIPING	2	GALVANIZED STEEL	02570	SCH 40			

MECHANICAL EQUIPMENT SCHEDULE

EQUIPMENT NUMBER	DESCRIPTION	CAPACITY
ME-1	P13A WINCH	
ME-2	P13B WINCH	
ME-3	P13C WINCH	
ME-4	P13D WINCH	
ME-5	P31E WINCH	
ME-6	P31F WINCH	
ME-7	P31G WINCH	
ME-8	P31H WINCH	

NOTES:

1. PIPE MATERIALS SHOWN IN THE PIPE SCHEDULE SHALL APPLY UNLESS CALLED OUT OTHERWISE ON THE DRAWINGS.

NOT TO BE USED FOR CONSTRUCTION

90% DESIGN SUBMITTAL

Resource Consultants, Inc.
REDMOND, WA.

SAP#
PL#
DATE 1-16-09
ENG DPT/R2 DES DPT/R2
DR JES/R2 CH
APPROVAL

LRH IMPLEMENTATION
POND 13-14 MODIFICATIONS
PIPING AND
VALVE SCHEDULES

PACIFICORP ENERGY
A PACIFICORP COMPANY
HYDRO

SCALE: NONE SHEET 005 116100 REV.

No.	DATE	REVISION	BY	CHK	APP	No.	DATE	REVISION	BY	CHK	APP	DRAWING No.	REFERENCE DRAWINGS	DRAWING No.	REFERENCE DRAWINGS

PLOT SCALE: 1 =

PLOTTED: 4/15/2009 2:31:25 PM
SAVED:
CTONET ID:

D161578

BORDER REVISED 10/31/08 SJB

Xref: ...\X_REF\XREF-DPT.dwg

24" STL-RU
REUSE DRAIN TO POND 15

G-11

P15 REUSE WELL

V-2

36" POND SUPPLY

42" POND SUPPLY

8" PVC-D

V-3

REARING POND AERATION TOWER

REUSE SUPPLY STOPLOG WEIR

G-6

G-13

ME-5

E

180FT X 20FT X 6.5FT
VOLUME=23,400 CF

1ST PASS SUPPLY INLET

REUSE SUPPLY SCREEN

REUSE SUPPLY STOPLOG WEIR

V-11

A

185FT X 20FT X 6.5FT
VOLUME=24,050 CF

G-1

ME-1

POND STOPLOG CONTROL

POND DRAIN CHANNEL

V-1

V-4

24" STL-S

8" PVC-D

18" STL-S

V-5

8" PVC-D

V-22
EDUCTOR VALVE

G-7

36" STL-RU
REUSE PIPELINE TO POND 15

ME-6

REUSE SUPPLY STOPLOG WEIR

180FT X 20FT X 6.5FT
VOLUME=23,400 CF

POND SCREENS

POND STOPLOG CONTROL

F

REUSE SUPPLY CHANNEL

V-12

G-2

B

195FT X 20FT X 6.5FT
VOLUME=25,350 CF

ME-2

DRAIN STANDPIPE

POND DRAIN CHANNEL

1ST PASS SUPPLY FLOW DEFLECTOR (TYPICAL)

V-20

V-6

V-17

G-12
36" REUSE CONTROL GATE TO POND 15

V-18

G-8

ME-7

POND 14

TOTAL REARING VOLUME E THROUGH H = 93,600 CF

POND DRAIN CHANNEL

G

180FT X 20FT X 6.5FT
VOLUME=23,400 CF

G-9
CANAL GATE CONTROL FOR REUSE TO POND 15

V-13

POND 13

TOTAL REARING VOLUME A THROUGH D = 98,800 CF

24" STL-RU

G-3

C

195FT X 20FT X 6.5FT
VOLUME=25,350 CF

ME-3

2" GS-V
POLLUTION ABATEMENT VACUUM SYSTEM

V-21

V-7

V-8

V-16

24" STL-RU

2" GS-UW

HIGH PRESSURE SUPPLY PUMP VAULT

V-23

G-10

ME-8

180FT X 20FT X 6.5FT
VOLUME=23,400 CF

POND SCREEN

H

POND STOPLOG CONTROL

G-4

D

190FT X 20FT X 6.5FT
VOLUME=24,050 CF

ME-4

V-9

V-10

18" STL-S

6" PVC HIGH PRESSURE SUPPLY

36" STL-D

24" STL DRAIN PIPELINE

2" GS-UW

V-15

18" STL-S

V-14

24" STL-S

G-5
SLIDE GATE CONTROL FOR POND DRAIN

P14 DRAIN WELL

24" STL-D

P13 DRAIN WELL

MATCHLINE FOR CONTINUATION SEE SHEET G7

NOT TO BE USED FOR CONSTRUCTION

90% DESIGN SUBMITTAL

6" PVC HIGH PRESSURE SUPPLY

PROCESS FLOW DIAGRAM

Resource Consultants, Inc.
REDMOND, WA.

SAP#	
PL#	
DATE 1-16-09	
ENG DPT/R2	DES DPT/R2
DR JES/R2	CH
APPROVAL	

LRH IMPLEMENTATION
POND 13-14 MODIFICATIONS
PROCESS FLOW
DIAGRAM - I

PACIFICORP ENERGY
A PACIFICORP COMPANY

HYDRO

SCALE: NONE | SHEET 006 | 116100 | REV.

PLOTTED: 4/15/2009 2:31:30 PM
SAVED:
CTONET ID:

D161578

BORDER REVISED 10/25/06 DJB

No.	DATE	REVISION	BY	CHK	APP

PLOT SCALE: 1 =

REFERENCE DRAWINGS | DRAWING No. | REFERENCE DRAWINGS | DRAWING No.

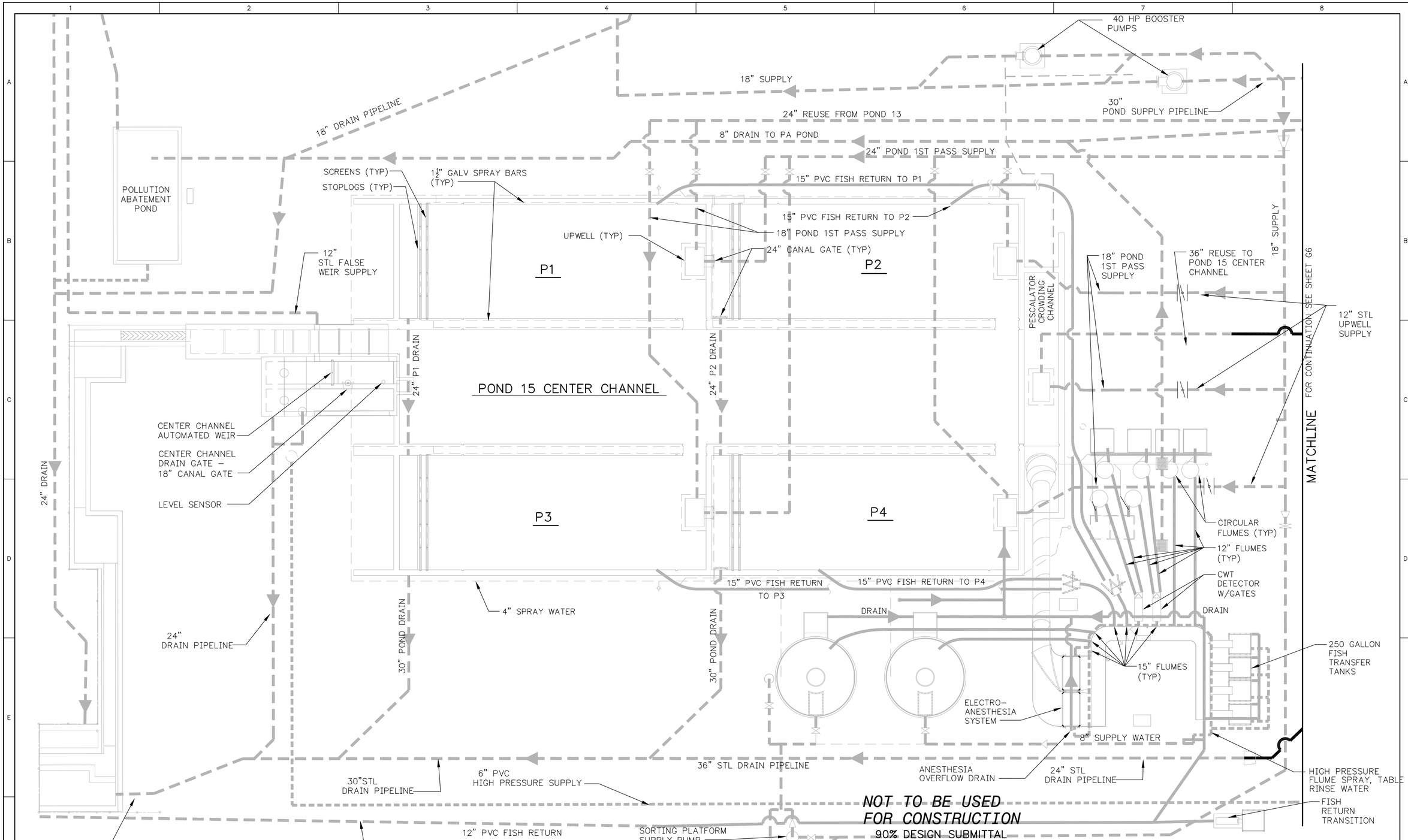

PROCESS FLOW DIAGRAM

Resource Consultants, Inc.
REDMOND, WA.

SAP#	
PL#	
DATE	1–16–09
ENG DPT/R2	DES DPT/R2
DR JES/R2	CH
APPROVAL	

LRH IMPLEMENTATION
POND 13–14 MODIFICATIONS
PROCESS FLOW
DIAGRAM – II

PACIFICORP ENERGY
A PACIFICORP COMPANY
HYDRO

SCALE: NONE	SHEET 007	116100	REV.

PLOTTED: 4/15/2009 2:31:34 PM
SAVED:
CYONET ID:
D161578

No.	DATE	REVISION	BY	CHK	APP	DRAWING No.	REFERENCE DRAWINGS	DRAWING No.	REFERENCE DRAWINGS

PLOT SCALE: 1 =

CIVIL NOTES:

1. PRIOR TO THE START OF CONSTRUCTION, THE CONTRACTOR SHALL LOCATE ALL EXISTING UTILITIES IN AND AROUND THE AREAS OF NEW CONSTRUCTION. THE CONTRACTOR SHALL POTHOLE FOR EXISTING UTILITIES PRIOR TO SUBMITTAL OF SHOP DRAWINGS, FOR POINTS OF CONNECTIONS.
2. THE CONTRACTOR SHALL PROTECT ALL EXISTING UTILITIES TO REMAIN.
3. LOCATIONS OF UNDERGROUND UTILITIES SHOWN ON THE DRAWINGS WERE OBTAINED FROM AVAILABLE RECORDS. NEITHER THE OWNER NOR ENGINEER ASSUMES ANY RESPONSIBILITY FOR UTILITIES NOT SHOWN OR NOT IN THE LOCATION SHOWN. THE CONTRACTOR SHALL VERIFY ALL LOCATIONS AND ELEVATIONS AND SHALL TAKE ALL PRECAUTIONARY MEASURES NECESSARY TO PROTECT UTILITY LINES WHETHER SHOWN OR NOT SHOWN.
4. THE CONTRACTOR SHALL CONTACT THE UTILITY AGENCIES FOR FIELD LOCATION OF UTILITIES, AT LEAST 72 HOURS PRIOR TO START OF CONSTRUCTION.
5. THE CONTRACTOR SHALL TAKE ALL PRECAUTIONARY MEASURES NECESSARY TO PROTECT EXISTING IMPROVEMENTS WHICH ARE TO REMAIN IN PLACE FROM DAMAGE. ALL IMPROVEMENTS DAMAGED BY THE CONTRACTOR'S OPERATIONS SHALL BE EXPEDITIOUSLY REPAIRED OR RECONSTRUCTED AT THE CONTRACTOR'S EXPENSE WITHOUT ADDITIONAL COMPENSATION.
6. THE CONTRACTOR SHALL PROVIDE A MINIMUM OF 36 INCHES COVER ON ALL PIPELINES UNLESS OTHERWISE SHOWN OR DIRECTED.
7. ELEVATIONS SHOWN ARE TO INVERT (FLOWLINE) OF CONDUIT.
8. STRAIGHT SLOPES SHALL BE MAINTAINED BETWEEN INVERTS SHOWN OR SPECIFIED.
9. THE CONTRACTOR SHALL ADJUST ALL VALVE BOXES, PULL BOXES AND MANHOLES TO FINISHED GRADE UNLESS OTHERWISE SHOWN OR SPECIFIED. MANHOLES IN OPEN FIELDS SHALL BE SET ONE FOOT ABOVE GRADE. APPROXIMATE RIM ELEVATIONS ARE SHOWN ON DRAWINGS.
10. THE CONTRACTOR SHALL PROPERLY DISPOSE OF ALL DEBRIS FROM DEMOLITION AT CONTRACTORS EXPENSE.
11. ALL PIPE TRENCHING AND BACKFILL SHALL BE IN ACCORDANCE WITH DETAIL 2. THE PIPING SHOWN ON THESE PLANS SHALL BE RESTRAIN JOINT DESIGN WITH RESTRAINED HARNESS PROVIDED AT ALL SLEEVE TYPE COUPLINGS.
12. ALL BUILDING COORDINATES ARE TO OUTSIDE CORNER OF COLUMN OR BUILDING.
13. PRIOR TO ANY CONNECTION TO AN EXISTING UTILITY, THE
14. PRIOR TO ANY CONNECTION TO AN EXISTING UTILITY, THE CONTRACTOR SHALL COORDINATE WITH THE UTILITY AGENCIES.
15. FOR PIPING INSIDE STRUCTURES SEE MECHANICAL DRAWINGS.
16. THE CONTRACTOR SHALL PROVIDE TWO MECHANICAL SLEEVE COUPLINGS WITH RESTRAINED HARNESS SETS FOR EACH PIPE PENETRATING A STRUCTURE, WHETHER REFLECTED ON THE DRAWINGS OR NOT. THE CONNECTION SHALL BE 3' AND 8' AWAY FROM THE STRUCTURE, SEE SPECIFICATIONS.
17. ANY FILL EMPLACED UNDER FOOTINGS, SLABS OR FOUNDATIONS MUST HAVE 95% COMPACTION.

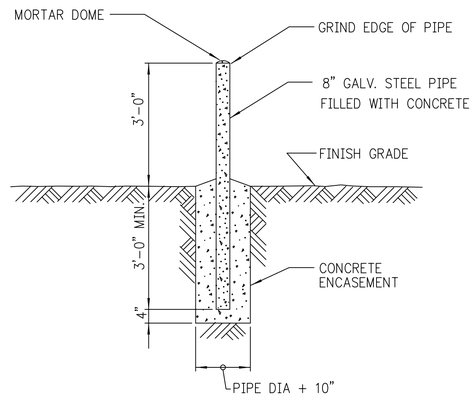

GUARD POST — 1/017 — 1/018

A. FLEXIBLE PIPE REFERS TO ALL STEEL, DUCTILE-IRON AND PLASTIC PIPES.

B. TYPICAL TRENCH SECTIONS (I, II AND III) ARE TO BE USED ONLY WHERE STABLE, COMPACT SOIL CONDITIONS EXIST. IF BOULDER OR LARGE OBSTRUCTIONS WOULD BE ENCOUNTERED, TRENCH SECTIONS MAY BE DEEPER OR WIDER THAN SHOWN. THE ENGINEER SHOULD BE ADVISED SHOULD THIS OCCUR.

C. THE NEED FOR PROTECTIVE SYSTEMS, AND EXCAVATION SLOPES SHALL BE DETERMINED CONSIDERING APPLICABLE LOCAL, STATE AND FEDERAL (OSHA) SAFETY STANDARDS AND REGULATIONS.

D. PROTECTIVE SYSTEMS SHALL BE DESIGNED AND BUILT IN ACCORDANCE WITH THE APPLICABLE LOCAL, STATE AND FEDERAL (OSHA) SAFETY STANDARDS AND REGULATIONS.

E. SUPPORTING DOCUMENTATION SHALL BE SUBMITTED TO THE ENGINEER REGARDING PIPE DESIGN AND COMPLIANCE WITH APPLICABLE LOCAL, STATE AND FEDERAL (OSHA) SAFETY STANDARDS.

F. UNSUPPORTED VERTICAL AND/OR SLOPING TRENCH WALL SLOPES SHALL NOT BE STEEPER THAN ALLOWED BY APPLICABLE LOCAL, STATE AND FEDERAL (OSHA) SAFETY STANDARDS AND REGULATIONS, UNLESS SUPPORTING DOCUMENTATION IS SUBMITTED, ACCORDING TO AFOREMENTIONED SAFETY STANDARDS.

G. TRENCH SECTIONS OTHER THAN THE TYPICAL SECTIONS SHOWN MAY BE UTILIZED PROVIDED THEY COMPLY WITH APPLICABLE LOCAL, STATE AND FEDERAL (OSHA) SAFETY STANDARDS AND REGULATIONS. DOCUMENTATION SUPPORTING THIS COMPLIANCE AND PIPE DESIGN CALCULATIONS SHALL BE SUBMITTED TO THE ENGINEER.

H. IF OVER-EXCAVATION DUE TO POOR FOUNDATION MATERIAL IS ORDERED BY THE ENGINEER, THE BACKFILL MATERIAL SHALL BE ACCORDING TO THE EARTHWORK SECTION OF THE SPECIFICATIONS ARTICLE ENTITLED.

I. IF DURING CONSTRUCTION, THE WATER TABLE WILL BE DISCOVERED TO BE ABOVE THE TRENCH BOTTOM, THE ENGINEER SHALL BE NOTIFIED, AND APPROPRIATE DEWATERING SHALL BE IMPLEMENTED TO LOWER THE WATER LEVEL BELOW THE TRENCH BOTTOM.THE BACKFILL MATERIAL SHALL BE ACCORDING TO THE EARTHWORK SECTIONS OF THE SPECIFICATIONS, OR AS ORDERED BY THE ENGINEER.

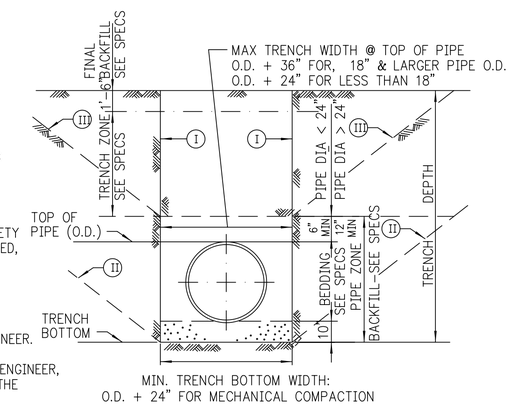

TRENCH SECTION – FLEXIBLE PIPE — 2/–

1.11607142857

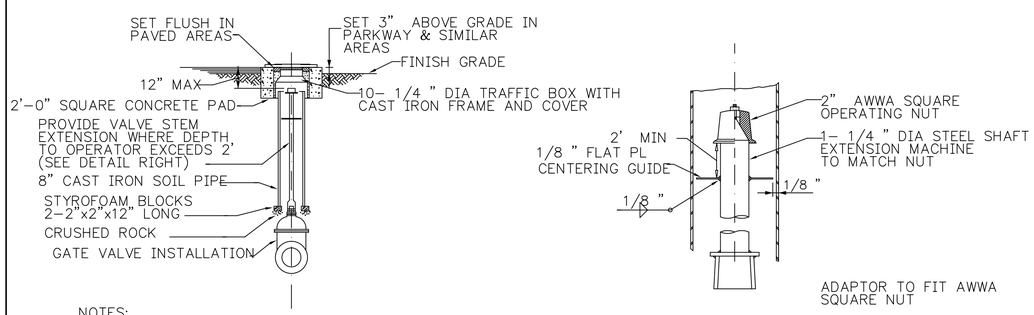

NOTES:
PROVIDE PROTECTIVE COATING TO EXTERIOR SURFACE OF VALVE BODY IN ACCORDANCE WITH SPECS.

BURIED VALVE INSTALLATION — 3/018

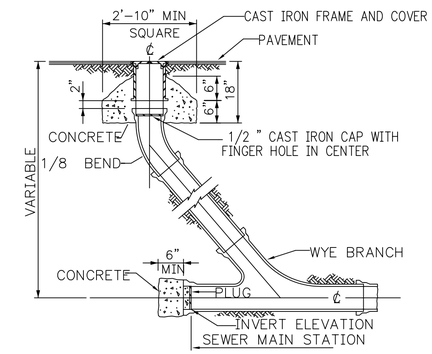

NOTE:
1. IF IN UNIMPROVED AREA TOP SHALL BE 6" ABOVE GRADE.
2. SEE PLAN FOR STATION AND INVERT ELEVATION. PIPE AND FITTINGS SHALL BE OF THE SAME MATERIAL AS THE MAIN LINE SEWER.

CLEANOUT TO GRADE (COTG) — 4/–

NOT TO BE USED FOR CONSTRUCTION

90% DESIGN SUBMITTAL

0 1"

BAR MEASURES ONE INCH ON ORIGINAL DRAWINGS

Resource Consultants, Inc.
REDMOND, WA.

SAP#	
PL#	
DATE 1-16-09	
ENG DPT/R2	DES DPT/R2
DR JES/R2	CH
APPROVAL	

LRH IMPLEMENTATION
POND 13-14 MODIFICATIONS
GENERAL CIVIL DETAILS – I

PACIFICORP ENERGY — HYDRO

SCALE: NONE | SHEET 008 | 116100 | REV.

PLOTTED: 4/15/2009 2:31:40 PM
SAVED:
CYDNET ID:
D161578

PLOT SCALE: 1 =

No.	DATE	REVISION	BY	CHK	APP	No.	DATE	REVISION	BY	CHK	APP	DRAWING No.	REFERENCE DRAWINGS	DRAWING No.	REFERENCE DRAWINGS

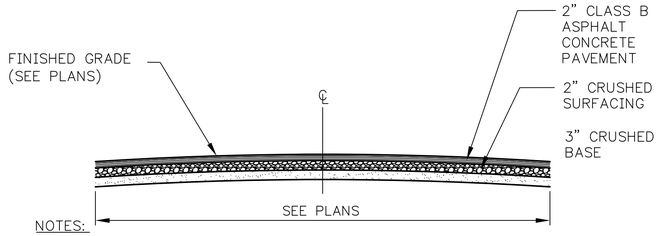

NOTES:

1 MATCH NEW AC PAVING WITH EXISTING UNLESS OTHERWISE NOTED.

2 GRAY SHADING INDICATES PAVING OR CONCRETE.

3 FOLLOWING EXISTING EDGE OF AC PAVEMENT UNLESS OTHERWISE NOTED.

PAVING DETAIL 6/017 6/018

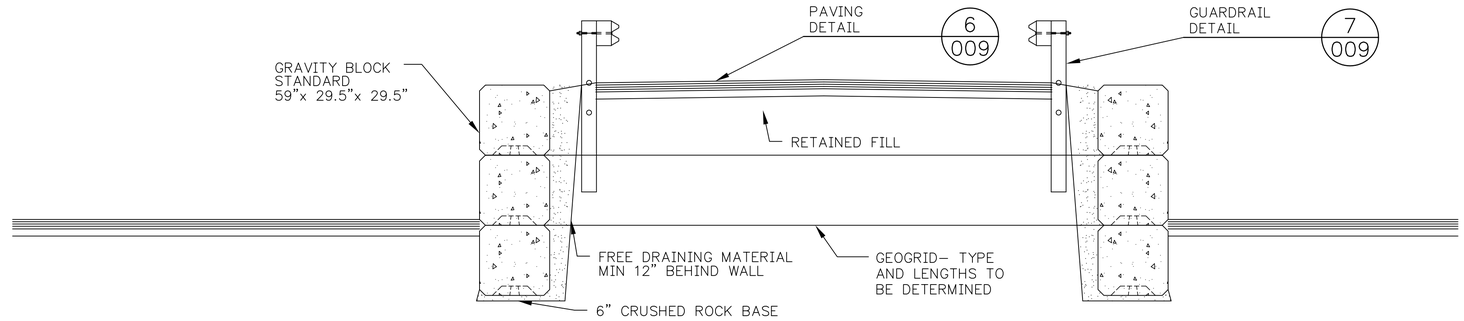

GRAVITY BLOCK WALL 2/018

12" 6" 0 1' 2' 3' 4' 5' 6' 7'

3/8"=1'–0"

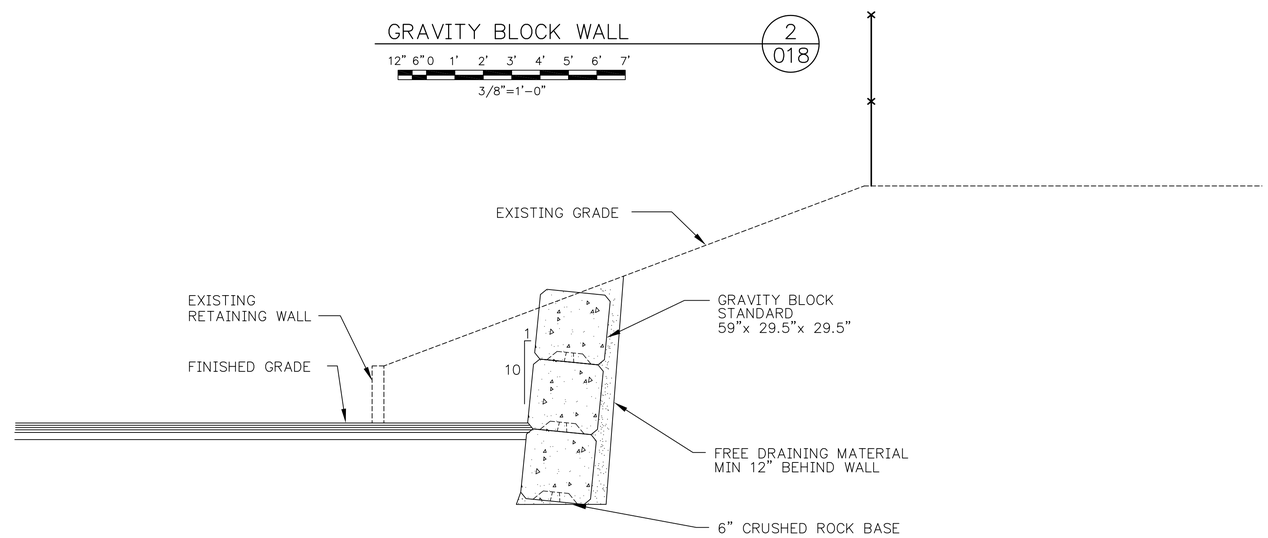

GRAVITY BLOCK WALL 2A/018

12" 6" 0 1' 2' 3' 4' 5' 6' 7'

3/8"=1'–0"

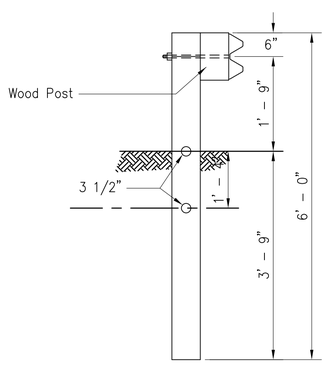

GUARDRAIL DETAIL 7/018

NOT TO BE USED
FOR CONSTRUCTION

90% DESIGN SUBMITTAL

0 1"

BAR MEASURES ONE INCH
ON ORIGINAL DRAWINGS

Resource Consultants, Inc.
REDMOND, WA.

SAP#	
PL#	
DATE	1–16–09
ENG	DPT/R2 DES DPT/R2
DR	JES/R2 CH
APPROVAL	

LRH IMPLEMENTATION
POND 13–14 MODIFICATIONS
GENERAL CIVIL DETAILS – II

PACIFICORP ENERGY
A PACIFICORP COMPANY

HYDRO

SCALE: NONE | SHEET 009 | 116100 | REV.

PLOTTED: 4/15/2009 2:31:45 PM
SAVED:
CYONET ID:

D161578

PLOT SCALE: 1 =

No.	DATE	REVISION	BY	CHK	APP	REVISION	BY	CHK	APP	DRAWING No.	REFERENCE DRAWINGS	DRAWING No.	REFERENCE DRAWINGS

TEMPORARY EROSION AND SEDIMENT CONTROL NOTES

1. WORK ON THE PROJECT SHALL NOT BEGIN UNTIL MARCH 16, 2009 AND SHALL BE COMPLETED BY JULY 31, 2009.

2. THE IMPLEMENTATION OF THESE TESC PLANS AND THE CONSTRUCTION, MAINTENANCE, REPLACEMENT, AND UPGRADING OF THESE TESC FACILITIES SHALL BE SUPERVISED BY AN INDIVIDUAL CERTIFIED BY THE COUNTY. PROOF OF CERTIFICATION SHALL BE SUBMITTED AT THE PRE-CONSTRUCTION CONFERENCE.

3. THE BOUNDARIES OF THE CLEARING LIMITS SHOWN ON THIS PLAN SHALL BE CLEARLY FLAGGED BY A CONTINUOUS LENGTH OF THE SURVEY TAPE (OR FENCING IF REQUIRED) PRIOR TO CONSTRUCTION, DURING CONSTRUCTION PERIOD, NO DISTURBANCE BEYOND THE CLEARING LIMITS SHALL BE PERMITTED. THE CLEARING LIMITS SHALL BE MAINTAINED BY THE TESC SUPERVISOR FOR THE DURATION OF CONSTRUCTION.

4. THE TESC FACILITIES SHOWN ON THIS PLAN MUST BE CONSTRUCTED PRIOR TO OR IN CONJUNCTION WITH ALL CLEARING AND GRADING SO AS TO ENSURE THAT THE TRANSPORT OF SEDIMENT TO SURFACE WATERS, DRAINAGE SYSTEM, AND ADJACENT PROPERTIES IS MINIMIZED.

5. THE TESC FACILITIES SHOWN ON THIS PLAN ARE THE MINIMUM REQUIREMENTS FOR THE ANTICIPATED SITE CONDITIONS. DURING THE CONSTRUCTION PERIOD THESE TESC FACILITIES SHALL BE UPGRADED AS NEEDED FOR UNEXPECTED STORM EVENTS AND MODIFIED TO ACCOUNT FOR CHANGING SITE CONDITIONS (E.G., ADDITIONAL SUMP PUMP, RELOCATION OF DITCHES AND SILT FENCES, ETC.)

6. THE TESC FACILITIES SHALL BE INSPECTED DAILY BY THE APPLICANT/TESC SUPERVISOR AND MAINTAINED TO ENSURE CONTINUED PROPER FUNCTIONING.

7. ANY AREAS OF EXPOSED SOILS, INCLUDING ROADWAY EMBANKMENTS, THAT WILL NOT BE DISTURBED FOR TWO DAYS DURING THE WET SEASON OR SEVEN DAY DURING THE DRY SEASON SHALL BE IMMEDIATELY STABILIZED WITH THE APPROVED TESC METHODS (E.G. SEEDING, MULCHING, PLASTIC COVERING. ETC.).

8. ANY AREA NEEDING TESC MEASURES, NOT REQUIRING IMMEDIATE ATTENTION , SHALL BE ADDRESSED WITHIN FIFTEEN (15) DAYS.

9. THE TESC FACILITIES ON INACTIVE SITES SHALL BE INSPECTED AND MAINTAINED A MINIMUM OF ONCE A MONTH OR WITHIN 48 HOURS OF FOLLOWING A STORM EVENT.

13. WHERE STRAW MULCH FOR TEMPORARY EROSION CONTROL IS REQUIRED, IT SHALL BE APPLIED AT A MINIMUM 2-INCH THICKNESS.

14. ALL CONSTRUCTION MATERIALS, WASTE MATERIALS, AND DEMOLITION DEBRIS SHALL BE HANDLED AND DISPOSED OF IN A MANNER SO AS TO PREVENT CONTAMINATION OF STORMWATER RUNOFF AND ADJACENT WATERWAYS.

15. MAINTENANCE AND FUELING OF CONSTRUCTION EQUIPMENT SHALL BE PERFORMED IN SUCH A MANNER TO MINIMIZE THE POTENTIAL CONTAMINATION OF STORMWATER RUNOFF AND ADJACENT WATERWAYS. SPILL CONTAINMENT AND CLEANUP KITS SHALL BE MAINTAINED ONSITE AND ANY SPILLS OF FUELS, HYDRAULIC FLUID, LUBRICANTS, OR OTHER HAZARDOUS MATERIAL SHALL BE CLEANED UP AND IMMEDIATELY AND PROPERLY DISPOSED OF.

RECOMMENDED CONSTRUCTION SEQUENCE:

1. PRE-CONSTRUCTION MEETING.

2. FLAG OR FENCE CONSTRUCTION LIMITS.

3. INSTALL PERIMETER PROTECTION (SILT FENCE, BRUSH BARRIER, ETC.)

4. GRADE AND STABILIZE CONSTRUCTION ROADS.

5. MAINTAIN EROSION CONTROL MEASURES IN ACCORDANCE WITH THE REQUIRED TECHNIQUES AND FREQUENCY.

6. JUST PRIOR TO THE PROJECT COMPLETION, ENSURE ALL DISTURBED AREAS ARE STABILIZED AND REMOVE TESC FEATURE IF APPROPRIATE (PERIMETER MARKING, FILTER FENCING, SEDIMENT TRAPS, ETC.).

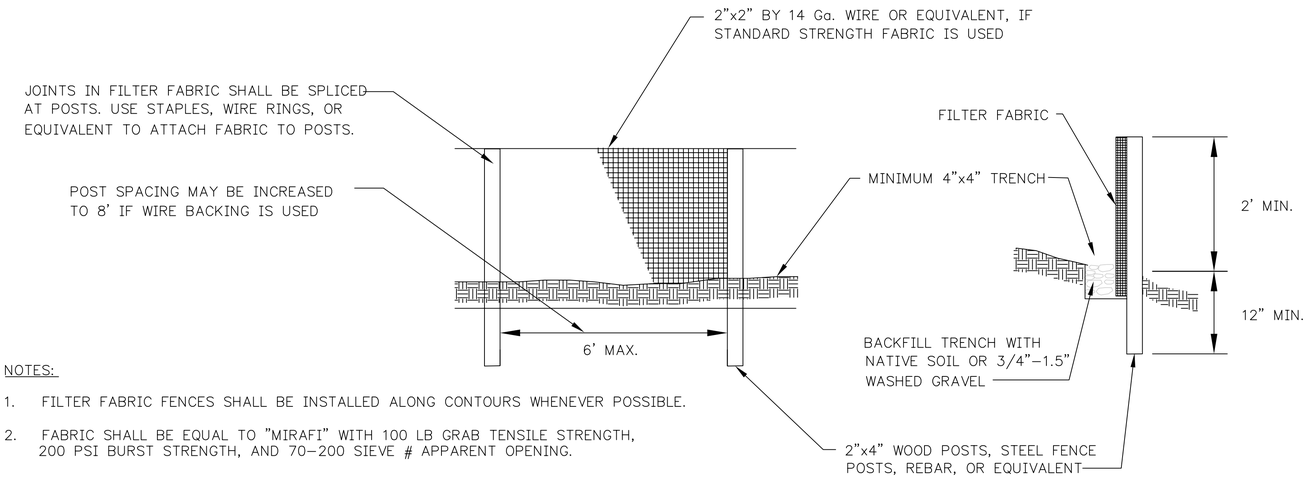

NOTES:

1. FILTER FABRIC FENCES SHALL BE INSTALLED ALONG CONTOURS WHENEVER POSSIBLE.

2. FABRIC SHALL BE EQUAL TO "MIRAFI" WITH 100 LB GRAB TENSILE STRENGTH, 200 PSI BURST STRENGTH, AND 70-200 SIEVE # APPARENT OPENING.

EROSION CONTROL BARRIER (1/012)
NOT TO SCALE

12" 6" 0 1' 2' 3' 4' 5' 6' 7'
3/8"=1'-0"

0 1"

BAR MEASURES ONE INCH ON ORIGINAL DRAWINGS

90% DESIGN SUBMITTAL

NOT TO BE USED FOR CONSTRUCTION

Resource Consultants, Inc.
REDMOND, WA.

SAP#	
PL#	
DATE	1-16-09
ENG	DPT/R2 DES DPT/R2
DR	JES/R2 CH
APPROVAL	

LRH IMPLEMENTATION
POND 13-14 MODIFICATIONS
GENERAL CIVIL DETAILS - III

PACIFICORP ENERGY
A PACIFICORP COMPANY
HYDRO

SCALE: AS SHOWN | SHEET 010 | 116100 | REV.

PLOTTED: 4/15/2009 2:31:50 PM
SAVED:
CYGNET ID:
D161578

PLOT SCALE: 1 =

No.	DATE	REVISION	BY	CHK	APP	No.	DATE	REVISION	BY	CHK	APP	DRAWING No.	REFERENCE DRAWINGS	DRAWING No.	REFERENCE DRAWINGS

BORDER REVISED 10/25/06 D.M.J.

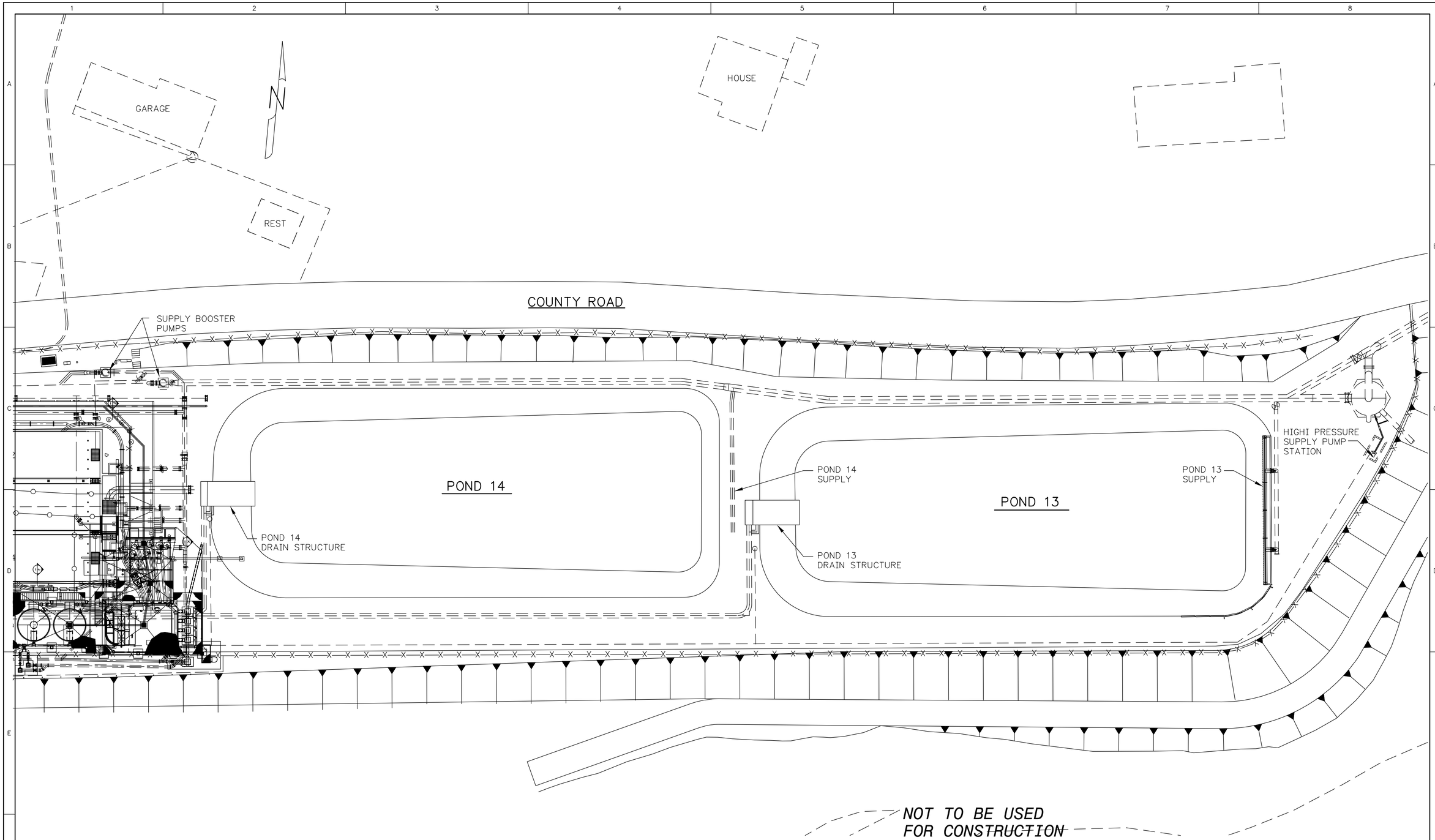

NOT TO BE USED FOR CONSTRUCTION

90% DESIGN SUBMITTAL

POND 13–14 EXISTING SITE PLAN

0 10 20 30

SCALE: 1" = 20'

0 1"

BAR MEASURES ONE INCH ON ORIGINAL DRAWINGS

Resource Consultants, Inc.
REDMOND, WA.

SAP#	
PL#	
DATE 1–16–09	
ENG DPT/R2	DES DPT/R2
DR JES/R2	CH
APPROVAL	

LRH IMPLEMENTATION
POND 13–14 MODIFICATIONS
EXISTING SITE PLAN

PACIFICORP ENERGY
A PACIFICORP COMPANY

HYDRO

SCALE: 1"=20' | SHEET 011 | 116100 | REV.

No.	DATE	REVISION	BY	CHK	APP	No.	DATE	REVISION	BY	CHK	APP	DRAWING No.	REFERENCE DRAWINGS	DRAWING No.	REFERENCE DRAWINGS

PLOT SCALE: 1 =

PLOTTED: 4/15/2009 2:32:00 PM
SAVED:
C:\ONE\T ID:

D161578

BORDER REVISED 10/29/08 SJ&J

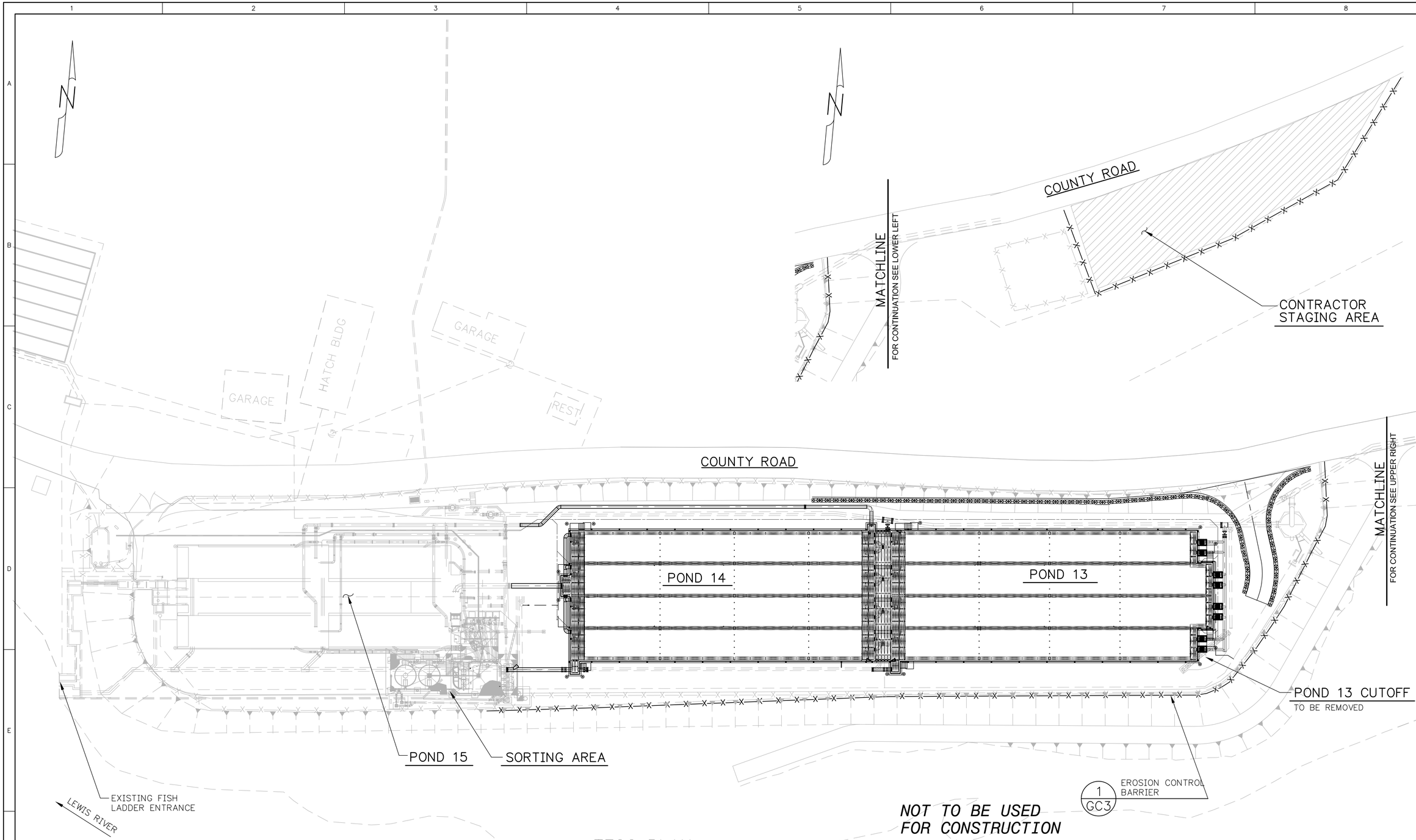

NOT TO BE USED FOR CONSTRUCTION

90% DESIGN SUBMITTAL

TESC PLAN

0 10 20 40 60

SCALE: 1" = 30'

0 1"

BAR MEASURES ONE INCH ON ORIGINAL DRAWINGS

Resource Consultants, Inc.
REDMOND, WA.

SAP#	
PL#	
DATE	1–16–09
ENG	DPT/R2
DES	DPT/R2
DR	JES/R2
CH	
APPROVAL	

LRH IMPLEMENTATION
POND 13–14 MODIFICATIONS
TESC AND CONSTRUCTION
STAGING AREA

PACIFICORP ENERGY
A PACIFICORP COMPANY

HYDRO

SCALE: 1"=30' | SHEET 012 | 116100 | REV.

No.	DATE	REVISION	BY	CHK	APP	DRAWING No.	REFERENCE DRAWINGS	DRAWING No.	REFERENCE DRAWINGS

PLOT SCALE: 1 =

PLOTTED: 4/15/2009 2:32:12 PM
SAVED:
CTONET ID:

D161578

BORDER REVISED 10/31/08 D.A.J.

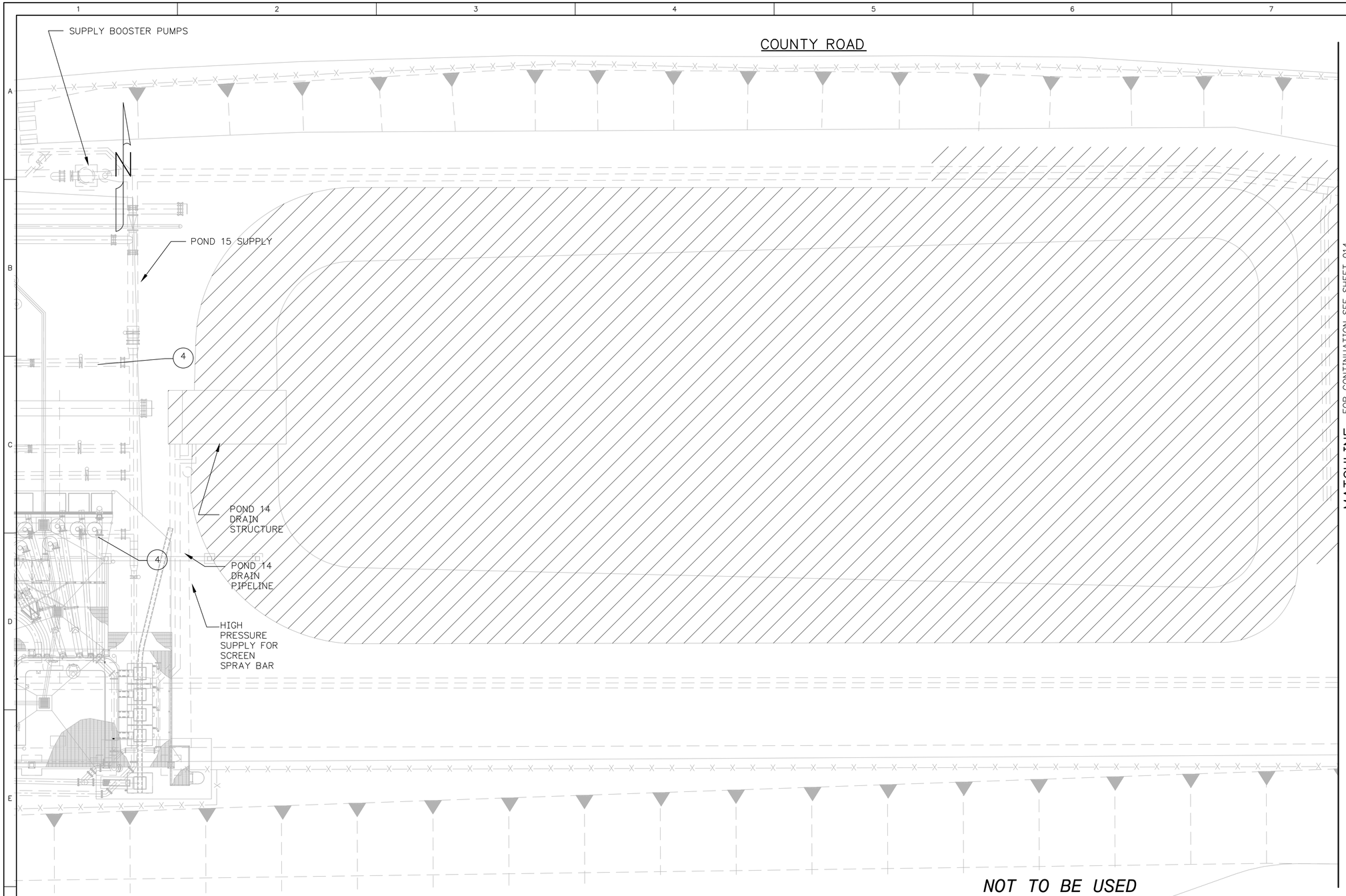

NOT TO BE USED FOR CONSTRUCTION

90% DESIGN SUBMITTAL

NOTES:

1. THIS SHEET CONTAINS INFORMATION ASSEMBLED FROM SEVERAL DRAWINGS.
2. LOCATIONS OF PIPES, CONDUITS, ETC SHOULD BE CONSIDERED APPROXIMATE AND THIS SHEET IS INTENDED TO BE WORKED IN CONJUNCTION WITH TECHNICAL SPECIFICATIONS.
3. REMOVE OVERHEAD HOIST CRANE STRUCTURE.
4. REMOVE UPPER SUPPLY PIPELINE WHILE PROTECTING LOWER SUPPLY PIPELINE.
5. REMOVE AND RELOCATE EXISTING GATE TO NEW LOCATION.
6. ASPHALT REMOVED SHALL BE DEPOSITED AT AN APPROVED DISPOSAL FACILITY.

DEMOLITION PLAN

0 10 20

SCALE: 1" = 10'

0 1"

BAR MEASURES ONE INCH ON ORIGINAL DRAWINGS

Resource Consultants, Inc.
REDMOND, WA.

SAP#	
PL#	
DATE	1-16-09
ENG DPT/R2	DES DPT/R2
DR JES/R2	CH
APPROVAL	

LRH IMPLEMENTATION
POND 13-14 MODIFICATIONS
DEMOLITION PLAN - I

PACIFICORP ENERGY
A PACIFICORP COMPANY

HYDRO

SCALE: 1"=10' | SHEET 013 | 116100 | REV.

No.	DATE	REVISION	BY	CHK	APP	No.	DATE	REVISION	BY	CHK	APP	DRAWING No.	REFERENCE DRAWINGS	DRAWING No.	REFERENCE DRAWINGS

PLOT SCALE: 1 =

PLOTTED: 4/15/2009 2:32:30 PM
SAVED:
CYONET ID:

D161578

BORDER REVISED 10/31/08 DJ&J

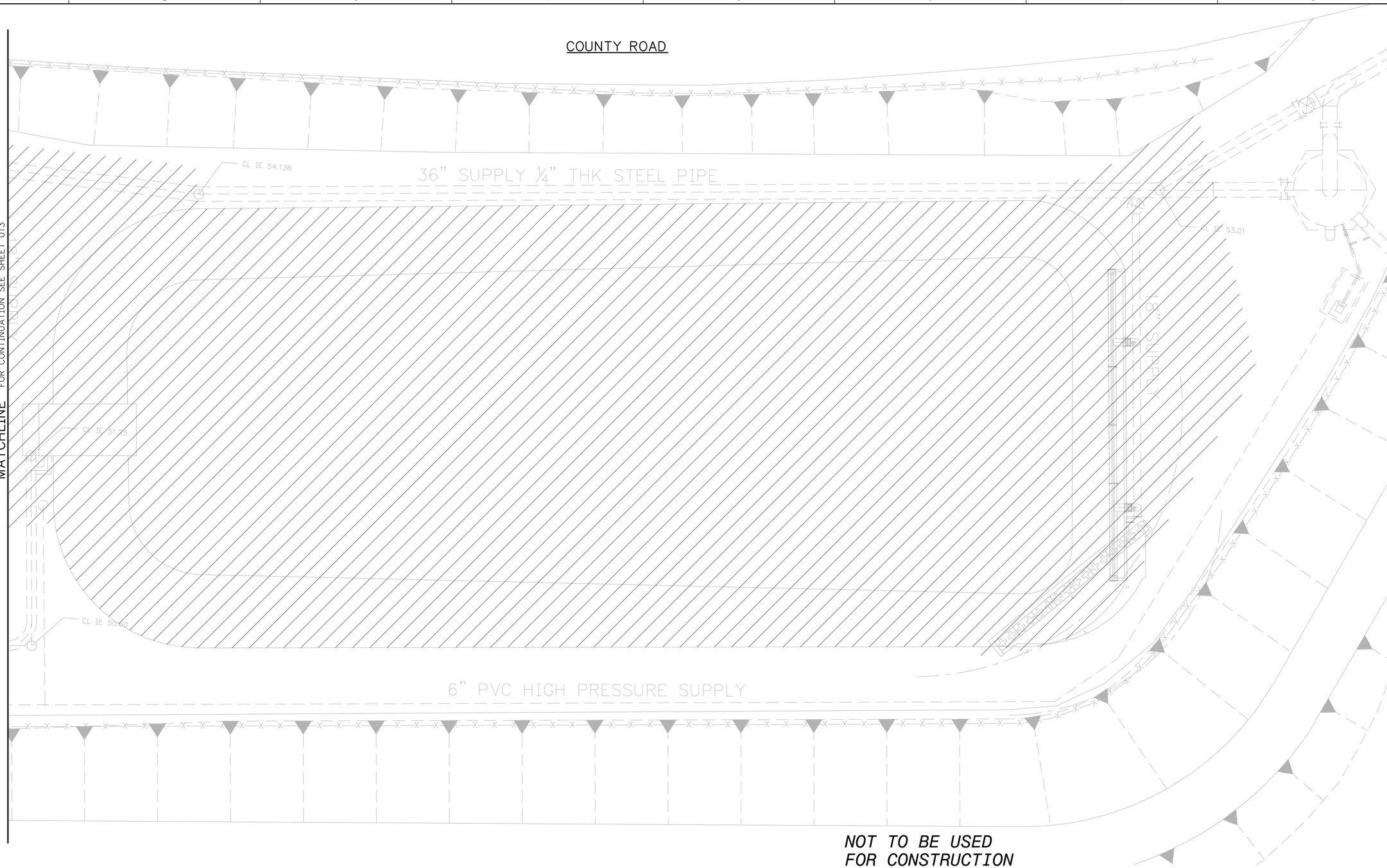

NOT TO BE USED FOR CONSTRUCTION

90% DESIGN SUBMITTAL

NOTES:

1. THIS SHEET CONTAINS INFORMATION ASSEMBLED FROM SEVERAL DRAWINGS.
2. LOCATIONS OF PIPES, CONDUITS, ETC SHOULD BE CONSIDERED APPROXIMATE AND THIS SHEET IS INTENDED TO BE WORKED IN CONJUNCTION WITH TECHNICAL SPECIFICATIONS.
3. ---
4. REMOVE UPPER SUPPLY PIPELINE WHILE PROTECTING LOWER SUPPLY PIPELINE.
5. REMOVE AND RELOCATE EXISTING GATE TO NEW LOCATION.
6. ASPHALT REMOVED SHALL BE DEPOSITED AT AN APPROVED DISPOSAL FACILITY.

DEMOLITION PLAN

0 10 20

SCALE: 1" = 10'

0 1"

BAR MEASURES ONE INCH ON ORIGINAL DRAWINGS

Resource Consultants, Inc.
REDMOND, WA.

SAP#	
PL#	
DATE	1-16-09
ENG	DPT/R2
DES	DPT/R2
DR	JES/R2
CH	
APPROVAL	

LRH IMPLEMENTATION
POND 13-14 MODIFICATIONS
DEMOLITION PLAN - II

PACIFICORP ENERGY
A PACIFICORP COMPANY

HYDRO

SCALE: 1"=10' | SHEET 014 | 116100 | REV.

No.	DATE	REVISION	BY	CHK	APP	No.	DATE	REVISION	BY	CHK	APP	DRAWING No.	REFERENCE DRAWINGS	DRAWING No.	REFERENCE DRAWINGS

PLOT SCALE: 1 =

PLOTTED: 4/15/2009 2:32:40 PM
SAVED:
CYONET ID:

D161578

BORDER REVISED 10/29/08 DJB

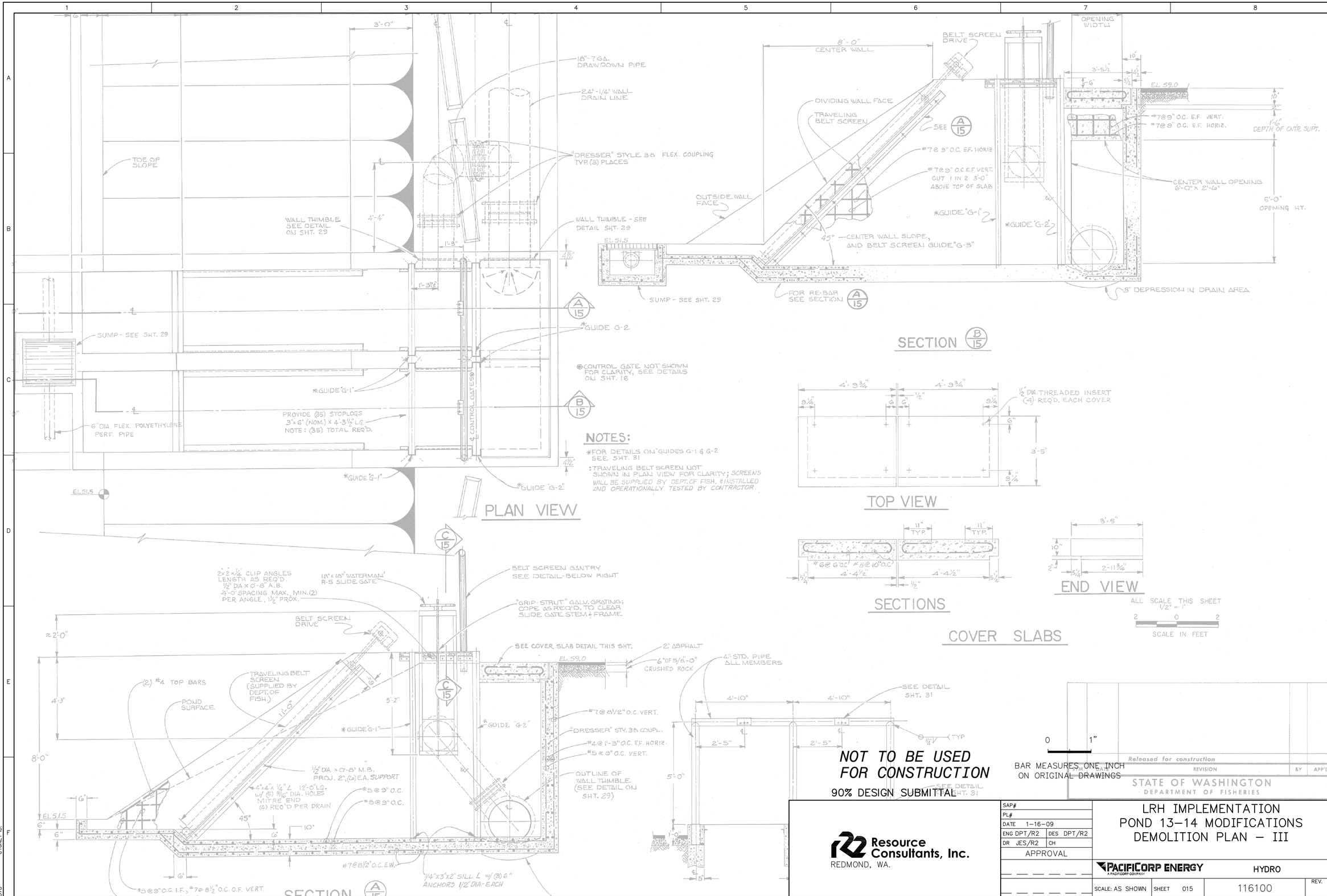

NOT TO BE USED FOR CONSTRUCTION

90% DESIGN SUBMITTAL

BAR MEASURES ONE INCH ON ORIGINAL DRAWINGS

0 1"

Released for construction

REVISION	BY	APP'D

STATE OF WASHINGTON
DEPARTMENT OF FISHERIES

Resource Consultants, Inc.
REDMOND, WA.

SAP#	
PL#	
DATE 1-16-09	
ENG DPT/R2	DES DPT/R2
DR JES/R2	CH
APPROVAL	

LRH IMPLEMENTATION
POND 13-14 MODIFICATIONS
DEMOLITION PLAN - III

PACIFICORP ENERGY
A PACIFICORP COMPANY

HYDRO

SCALE: AS SHOWN | SHEET 015 | 116100 | REV.

PLOTTED: 4/15/2009 2:32:45 PM
SAVED:
CYONET ID:

D161578

PLOT SCALE: 1 =

No.	DATE	REVISION	BY	CHK	APP	No.	DATE	REVISION	BY	CHK	APP	DRAWING No.	REFERENCE DRAWINGS	DRAWING No.	REFERENCE DRAWINGS

BORDER REVISED 10/31/06 DJM

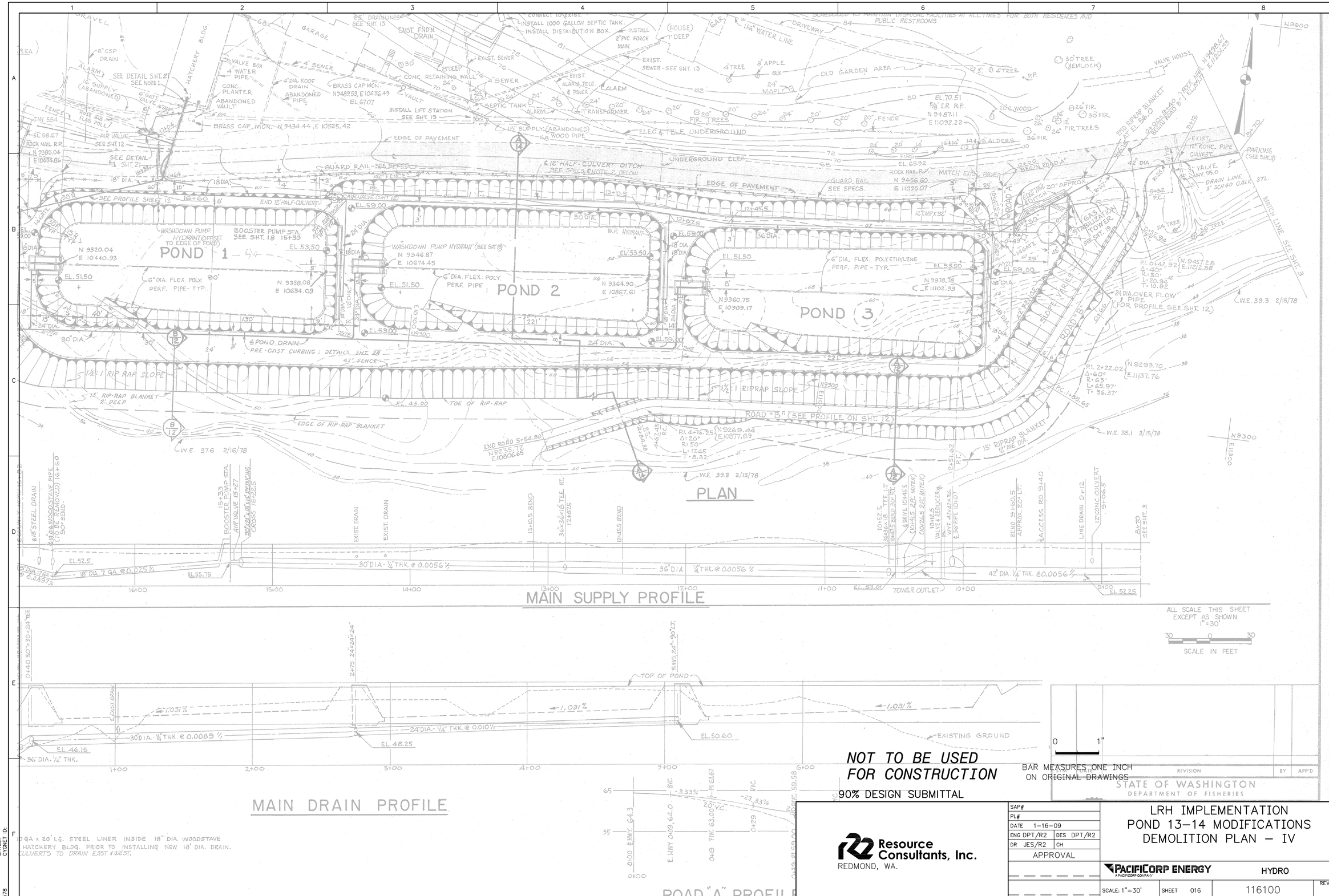

NOT TO BE USED FOR CONSTRUCTION

90% DESIGN SUBMITTAL

Resource Consultants, Inc.
REDMOND, WA.

SAP#	
PL#	
DATE 1-16-09	
ENG DPT/R2	DES DPT/R2
DR JES/R2	CH
APPROVAL	

LRH IMPLEMENTATION
POND 13-14 MODIFICATIONS
DEMOLITION PLAN – IV

PACIFICORP ENERGY
A PACIFICORP COMPANY

HYDRO

SCALE: 1"=30' | SHEET 016 | 116100 | REV.

No.	DATE	REVISION	BY	CHK	APP	PLOT SCALE: 1 =

No.	DATE	REVISION	BY	CHK	APP	DRAWING No.	REFERENCE DRAWINGS

PLOTTED: 4/15/2009 2:32:50 PM
SAVED:
CTONET ID:
D161578

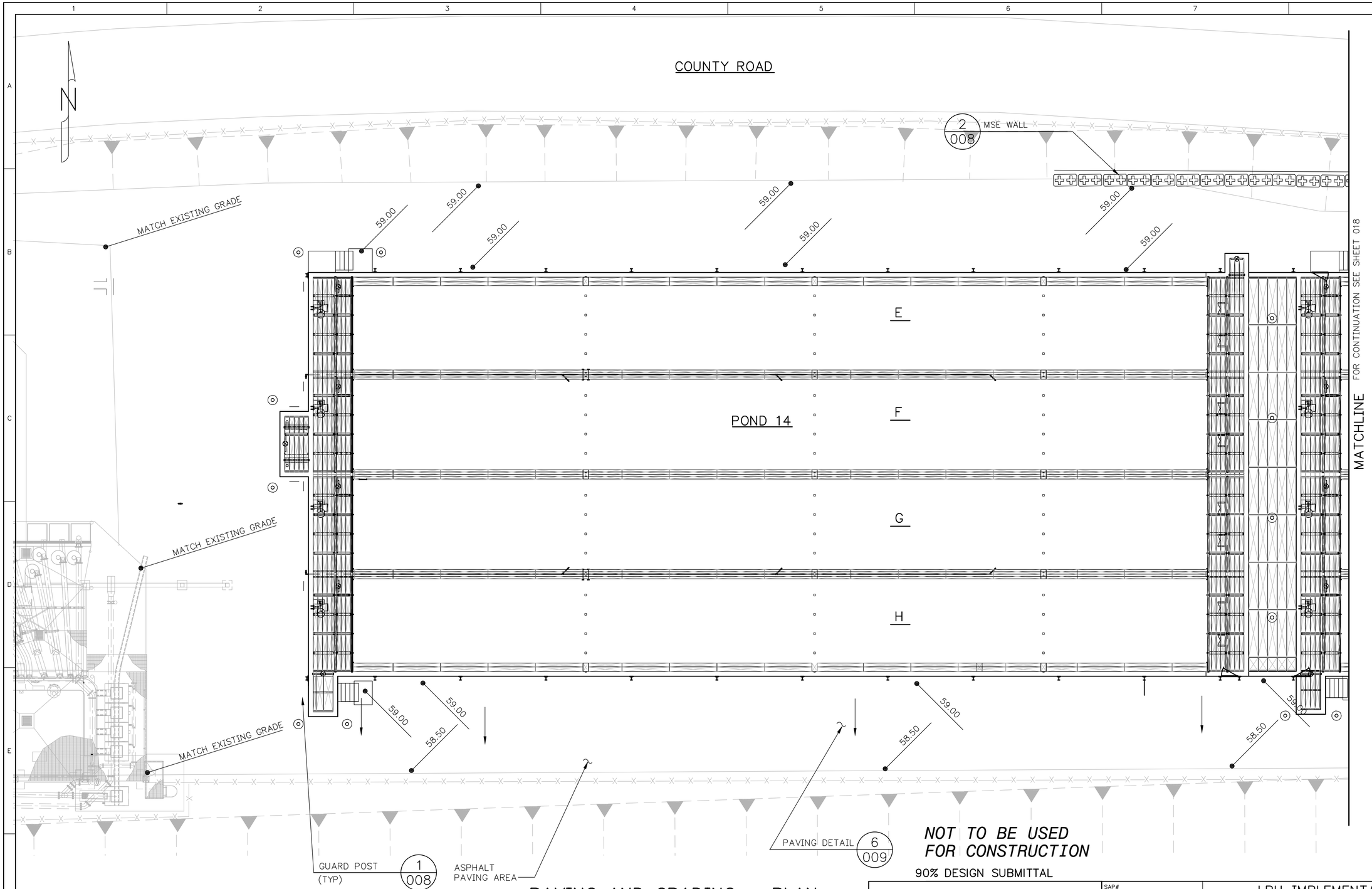

NOT TO BE USED
FOR CONSTRUCTION

90% DESIGN SUBMITTAL

PAVING AND GRADING – PLAN

0 10 20
SCALE: 1" = 10'

0 1"
BAR MEASURES ONE INCH
ON ORIGINAL DRAWINGS

Resource Consultants, Inc.
REDMOND, WA.

SAP#	
PL#	
DATE	1–16–09
ENG DPT/R2	DES DPT/R2
DR JES/R2	CH
APPROVAL	

LRH IMPLEMENTATION
POND 13–14 MODIFICATIONS
PAVING AND GRADING PLAN – I

PACIFICORP ENERGY
A PACIFICORP COMPANY

HYDRO

SCALE: 1"=10' | SHEET 017 | 116100 | REV.

No.	DATE	REVISION	BY	CHK	APP	DRAWING No.	REFERENCE DRAWINGS

PLOT SCALE: 1 =

PLOTTED: 4/15/2009 2:33:02 PM
SAVED:
CYGNET ID:

D161578

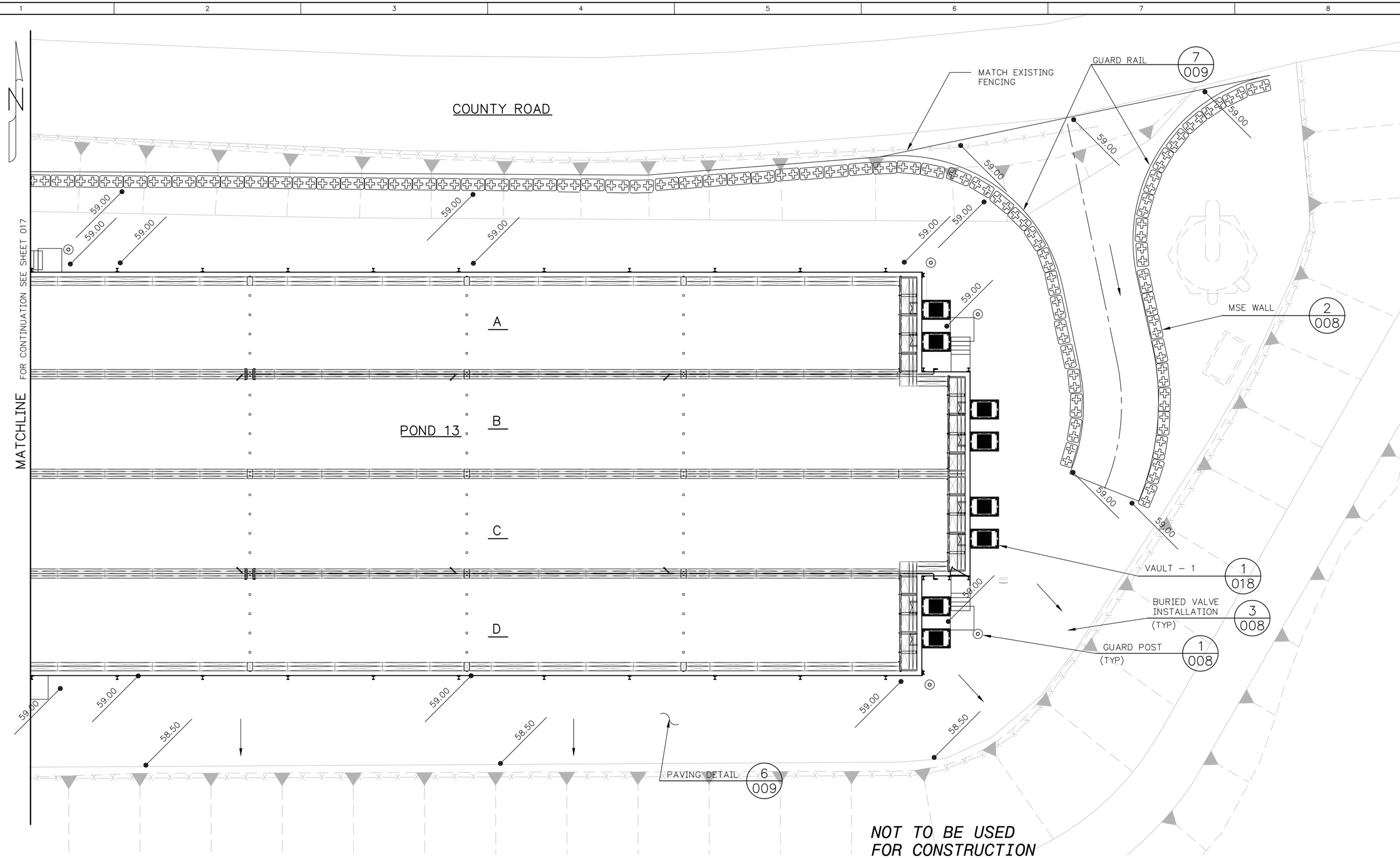

NOT TO BE USED FOR CONSTRUCTION

90% DESIGN SUBMITTAL

PAVING AND GRADING – PLAN

0 10 20
SCALE: 1" = 10'

0 1"
BAR MEASURES ONE INCH ON ORIGINAL DRAWINGS

Resource Consultants, Inc.
REDMOND, WA.

SAP#	
PL#	
DATE	1–16–09
ENG DPT/R2	DES DPT/R2
DR JES/R2	CH
APPROVAL	

LRH IMPLEMENTATION
POND 13–14 MODIFICATIONS
PAVING AND GRADING – II

PACIFICORP ENERGY
A PACIFICORP COMPANY

HYDRO

SCALE: 1"=10' | SHEET 018 | 116100 | REV.

No.	DATE	REVISION	BY	CHK	APP	DRAWING No.	REFERENCE DRAWINGS

PLOT SCALE: 1 =

PLOTTED: 4/15/2009 2:33:17 PM
SAVED:
CYONET ID:

D161578

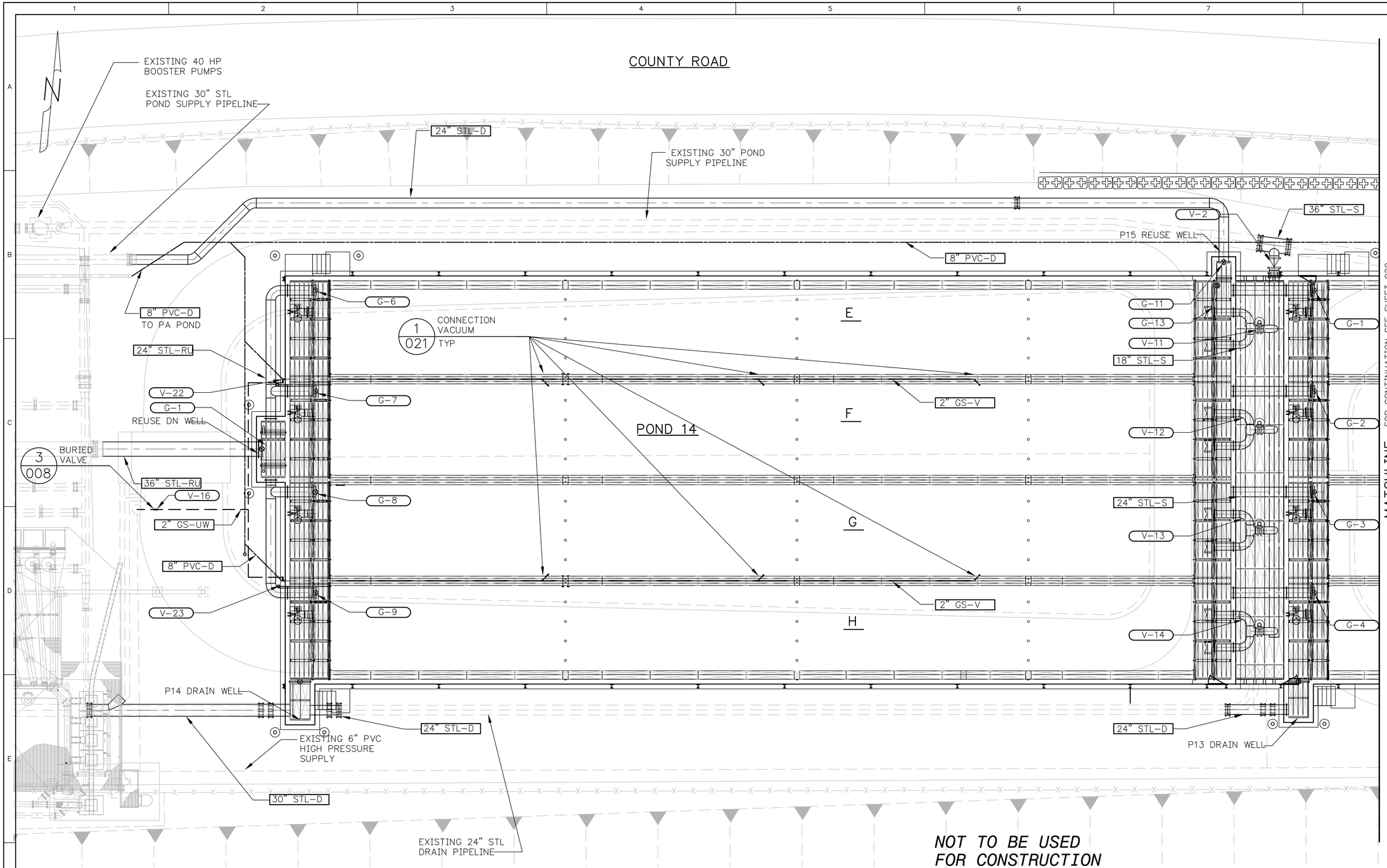

NOT TO BE USED FOR CONSTRUCTION

90% DESIGN SUBMITTAL

KEY

S = SUPPLY
RU = RE USE
D = DRAIN
V = VACUUM

YARD PIPING – PLAN

0 10 20
SCALE: 1" = 10'

0 1"
BAR MEASURES ONE INCH ON ORIGINAL DRAWINGS

Resource Consultants, Inc.
REDMOND, WA.

SAP#	
PL#	
DATE	1-16-09
ENG DPT/R2	DES DPT/R2
DR JES/R2	CH
APPROVAL	

LRH IMPLEMENTATION
POND 13-14 MODIFICATIONS
YARD PIPING PLAN – I

PACIFICORP ENERGY
A PACIFICORP COMPANY
HYDRO

SCALE: 1"=10' | SHEET 019 | 116100 | REV.

PLOTTED: 4/15/2009 2:33:32 PM
SAVED:
CYONET ID:
D161578

PLOT SCALE: 1 =

No.	DATE	REVISION	BY	CHK	APP	DRAWING No.	REFERENCE DRAWINGS	DRAWING No.	REFERENCE DRAWINGS

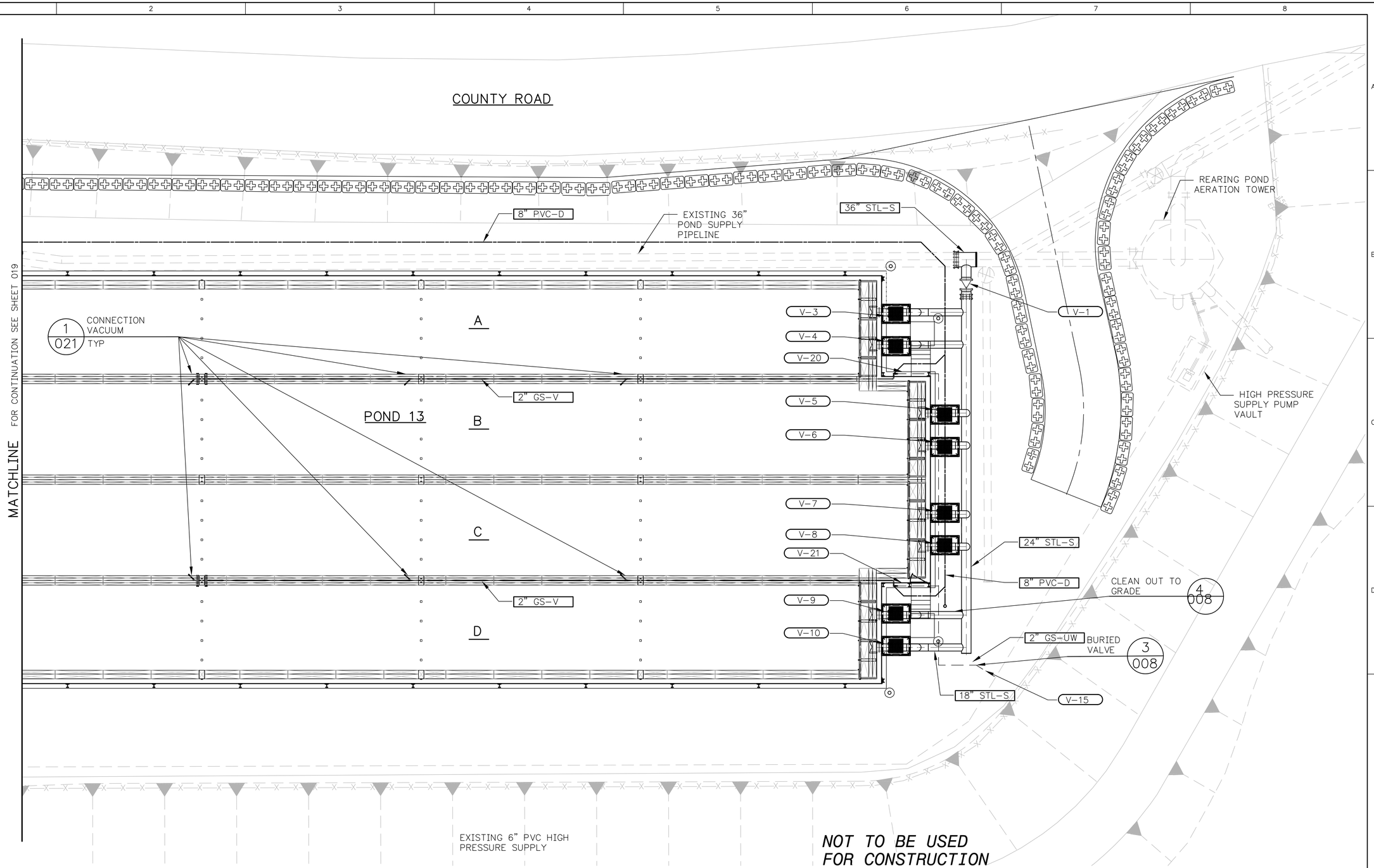

NOT TO BE USED FOR CONSTRUCTION

90% DESIGN SUBMITTAL

KEY

S = SUPPLY
RU = RE USE
D = DRAIN
V = VACUUM

YARD PIPING – PLAN

0 10 20
SCALE: 1" = 10'

0 1"
BAR MEASURES ONE INCH ON ORIGINAL DRAWINGS

Resource Consultants, Inc.
REDMOND, WA.

SAP#	
PL#	
DATE	1-16-09
ENG DPT/R2	DES DPT/R2
DR JES/R2	CH
APPROVAL	

LRH IMPLEMENTATION
POND 13-14 MODIFICATIONS
YARD PIPING PLAN – II

PACIFICORP ENERGY
A PACIFICORP COMPANY

HYDRO

SCALE: 1"=10' | SHEET 020 | 116100 | REV.

No.	DATE	REVISION	BY	CHK	APP	No.	DATE	REVISION	BY	CHK	APP	DRAWING No.	REFERENCE DRAWINGS	DRAWING No.	REFERENCE DRAWINGS

PLOT SCALE: 1 =

PLOTTED: 4/15/2009 2:33:45 PM
SAVED:
CYDNET ID:

D161578

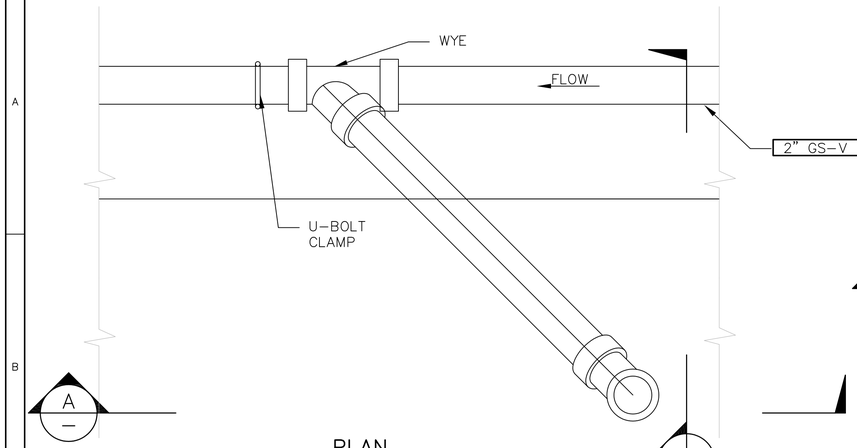

PLAN

TYPICAL VACUUM CONNECTION (1/019) (1/020)

12" 9" 6" 3" 0
3"=1'-0"

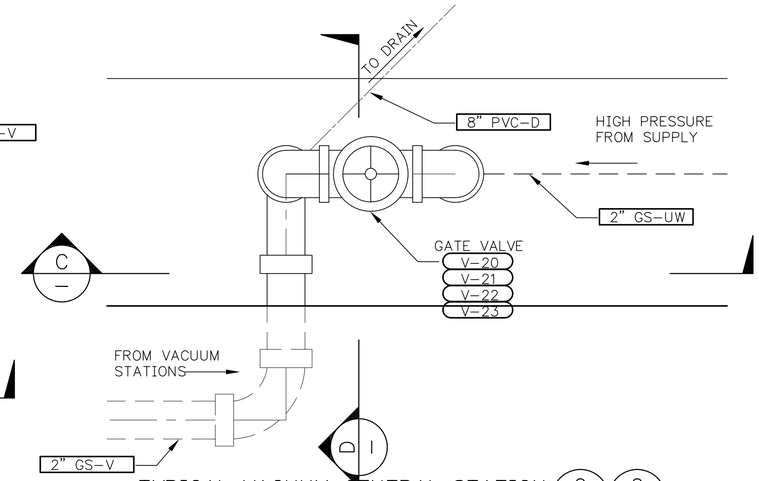

TYPICAL VACUUM CENTRAL STATION (2/019) (2/020)

12" 9" 6" 3" 0
3"=1'-0"

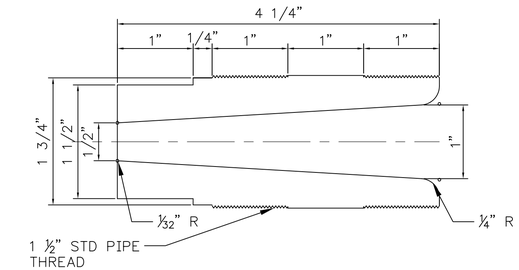

EDUCTOR NOZZLE (3/—)

FULL SIZE
MACHINE FROM BRASS

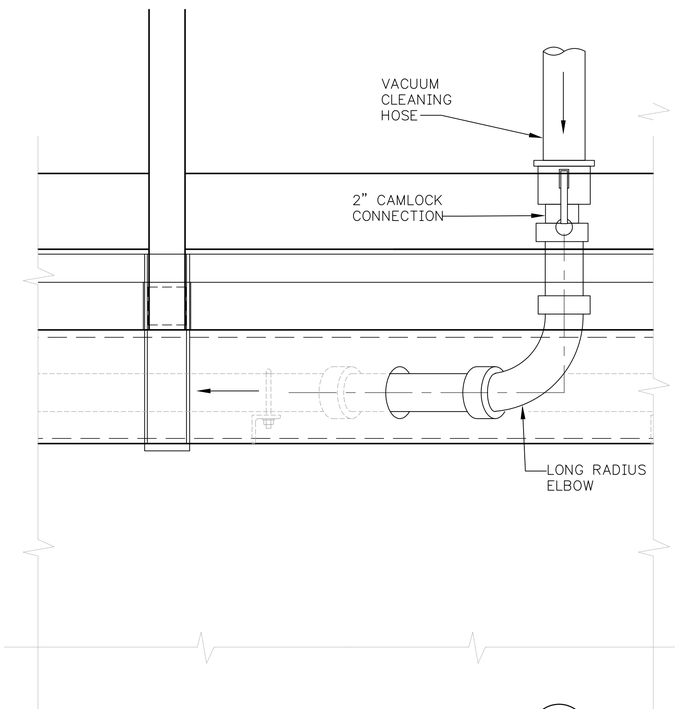

SECTION (A/—)

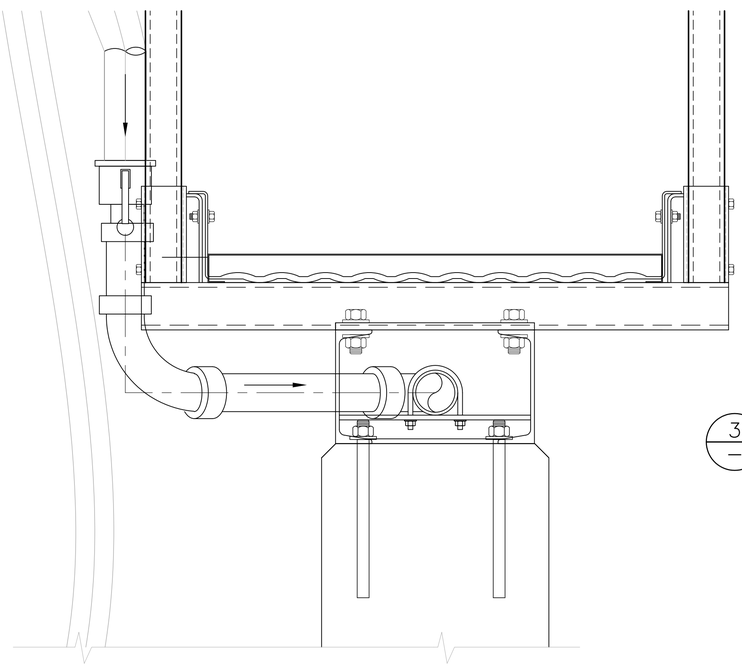

SECTION (B/—)

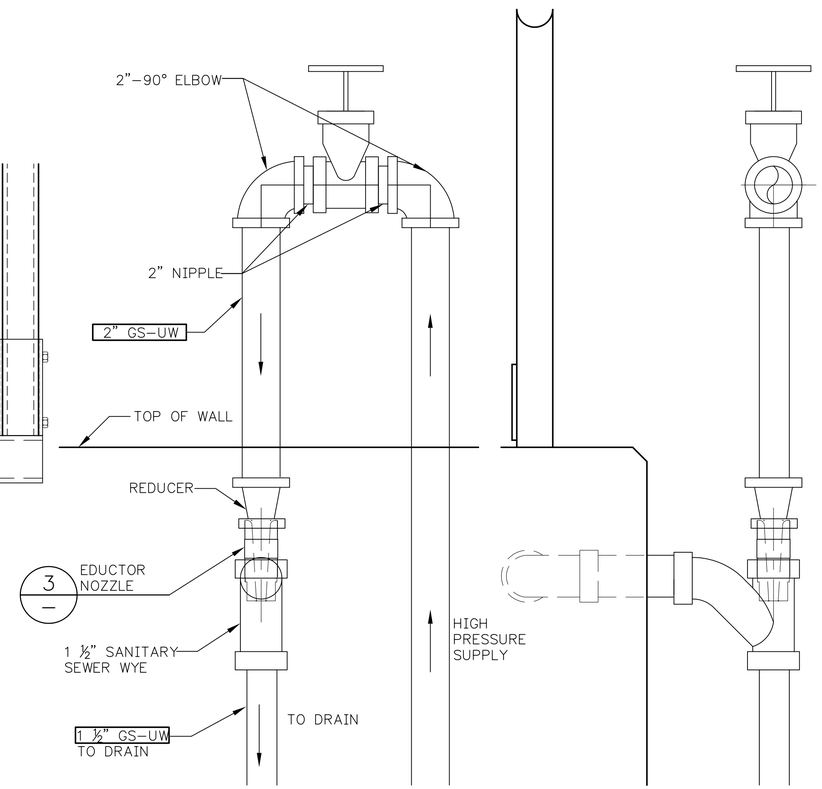

SECTION (C/—)

SECTION (D/—)

90% DESIGN SUBMITTAL

NOT TO BE USED FOR CONSTRUCTION

0 1"

BAR MEASURES ONE INCH ON ORIGINAL DRAWINGS

Resource Consultants, Inc.
REDMOND, WA.

SAP#	
PL#	
DATE	1-16-09
ENG	DPT/R2
DES	DPT/R2
DR	JES/R2
CH	
APPROVAL	

LRH IMPLEMENTATION
POND 13-14 MODIFICATIONS
VACUUM CLEANING STATION
PLAN AND SECTIONS

PACIFICORP ENERGY
A PACIFICORP COMPANY

HYDRO

SCALE: AS SHOWN | SHEET 021 | 116100 | REV.

PLOT SCALE: 1 =

No.	DATE	REVISION	BY	CHK	APP	No.	DATE	REVISION	BY	CHK	APP	DRAWING No.	REFERENCE DRAWINGS	DRAWING No.	REFERENCE DRAWINGS

PLOTTED: 4/15/2009 2:34:05 PM
SAVED:
CYONET ID:

D161578

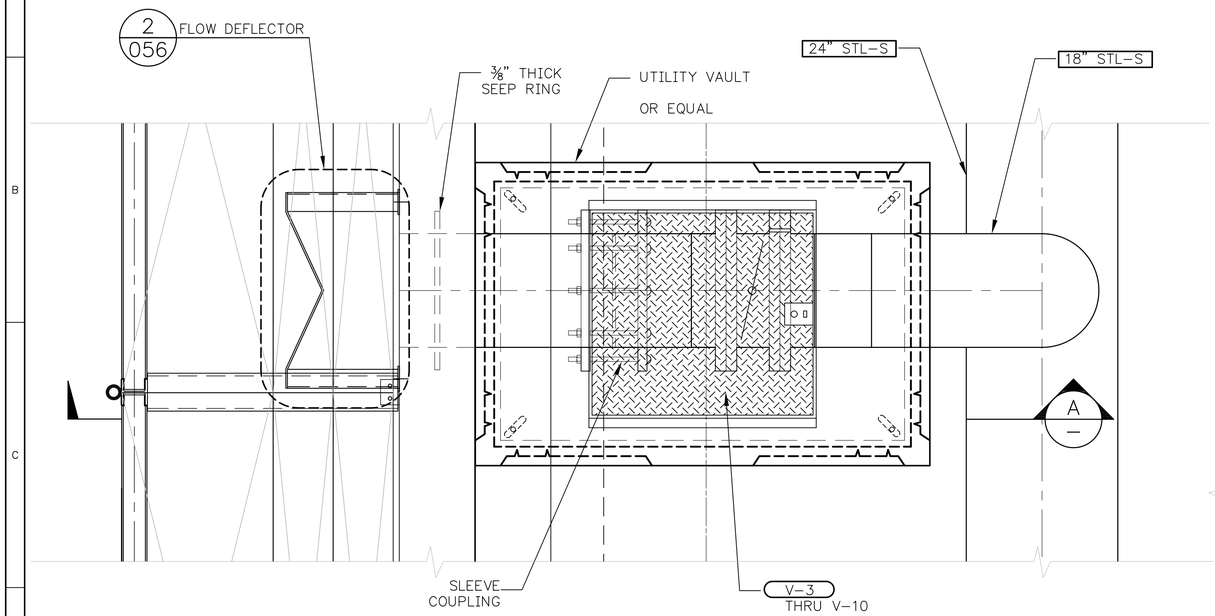

PLAN

VAULT-1 (1/018) (1/020)
SCALE: 1/2" = 1'-0"

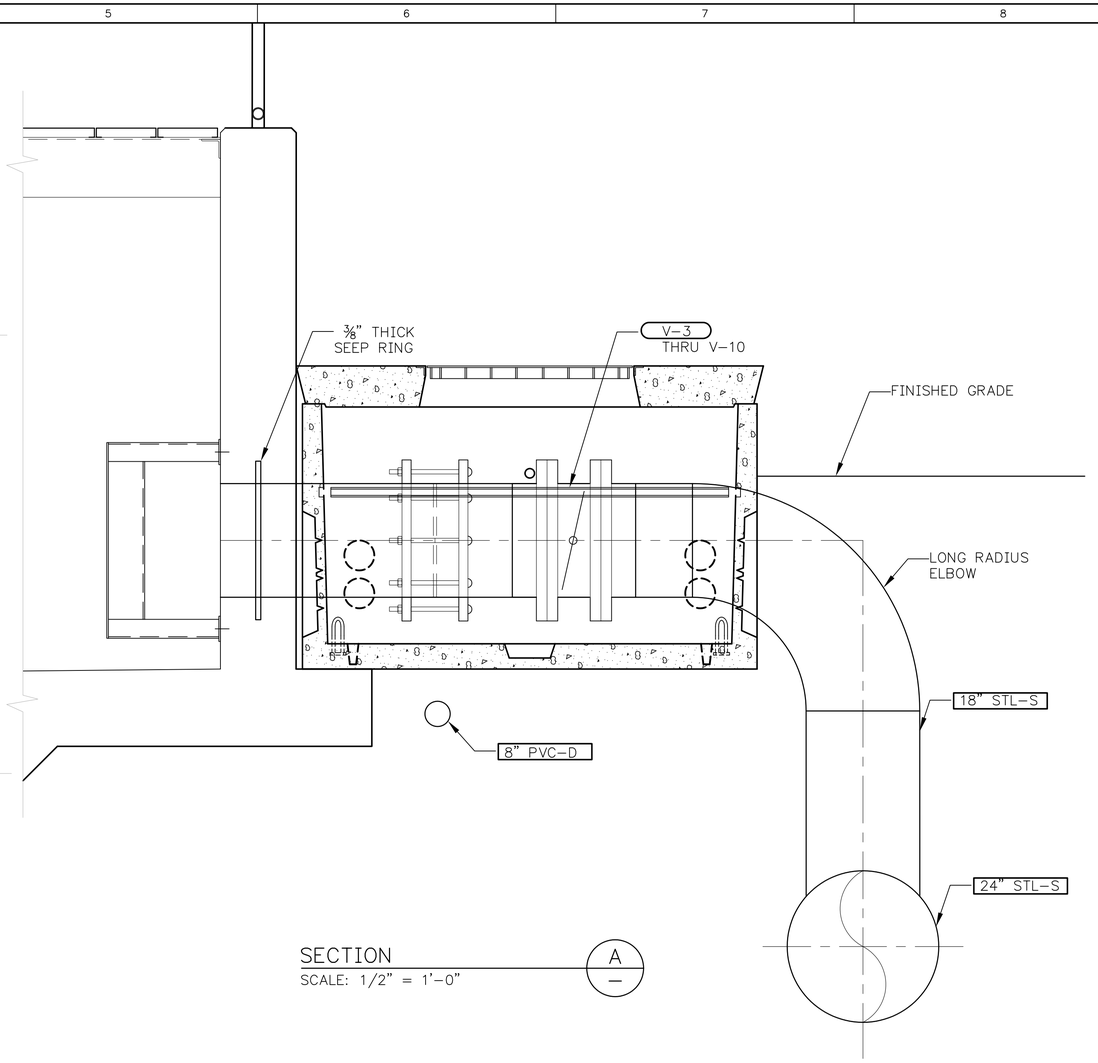

SECTION (A/—)
SCALE: 1/2" = 1'-0"

0 6" 1' 2' 4'
SCALE: 1/2" = 1'-0"

0 1"
BAR MEASURES ONE INCH
ON ORIGINAL DRAWINGS

NOT TO BE USED
FOR CONSTRUCTION

90% DESIGN SUBMITTAL

Resource Consultants, Inc.
REDMOND, WA.

SAP#	
PL#	
DATE	1-16-09
ENG	DPT/R2
DES	DPT/R2
DR	JES/R2
CH	
APPROVAL	

LRH IMPLEMENTATION
POND 13-14 MODIFICATIONS
VAULT - I

PACIFICORP ENERGY
A PACIFICORP COMPANY

HYDRO

SCALE: 1"=10' | SHEET 022 | 116100 | REV.

No.	DATE	REVISION	BY	CHK	APP	DRAWING No.	REFERENCE DRAWINGS

PLOT SCALE: 1 =

PLOTTED: 4/15/2009 2:34:52 PM
SAVED:
CYONET ID:

D161578

GENERAL STRUCTURAL NOTES

G1 CODE REQUIREMENTS: ALL DESIGN AND CONSTRUCTION SHALL CONFORM TO THE REQUIREMENTS OF THE 2006 INTERNATIONAL BUILDING CODE (IBC)

G2 DESIGN LOADS:

DEAD LOADS:
SELF WEIGHT OF BUILDING
SELF WEIGHT OF EQUIPMENT
ROOF MECH/ELEC 10PSF

LIVE LOADS:

ROOF SNOW LOAD	25 PSF
STAIRS	100 PSF
SIDEWALKS	150 PSF
GRATING	100 PSF
OTHER AREAS	100 PSF

WIND LOADS:
90 MPH, EXP C, OR 18PSF, WHICHEVER IS GREATER, PER 2006 IBC

SEISMIC LOADS:
PER 2006 IBC:
SITE CLASS D
Ss=1.089
S1=0.567
Fa=1.11
Fv=1.76

G3 DIMENSIONS: VERIFY ALL DIMENSIONS AND ALL CONDITIONS AT JOB SITE INCLUDING PONDS AND SITE CONDITIONS BEFORE COMMENCING WORK. COMMENCEMENT OF WORK INDICATES ACCEPTANCE OF FIELD CONDITIONS. STRUCTURAL DIMENSIONS CONTROLLED BY OR RELATED TO MECHANICAL OR ELECTRICAL EQUIPMENT SHALL BE VERIFIED PRIOR TO CONSTRUCTION. DO NOT SCALE DRAWINGS. USE ONLY WRITTEN DIMENSIONS.

G4 PROVISIONS FOR EQUIPMENT: VERIFY AND COORDINATE ALL REQUIRED OPENINGS IN FLOORS, WALLS, AND ROOF WITH ALL DISCIPLINES. MECHANICAL AND ELECTRICAL EQUIPMENT SUPPORTS, ANCHORAGES, OPENINGS AND RECESSES NOT SHOWN ON THE STRUCTURAL DRAWINGS BUT REQUIRED BY OTHER CONTRACT DRAWINGS SHALL BE PROVIDED.

G5 TYPICAL DETAILS: THE DETAILS SHOWN ARE TYPICAL AND SHALL BE USED FOR LIKE OR SIMILAR CONDITIONS NOT SHOWN.

G6 ALTERNATIVE DESIGNS: THE STRUCTURAL SYSTEMS AND DETAILS ON THESE PLANS ARE THE PRIORITY DESIGN. VARIATIONS AND MODIFICATIONS TO WORK SHOWN ON THESE DRAWINGS SHALL NOT BE CARRIED OUT WITHOUT WRITTEN PERMISSION FROM THE STRUCTURAL ENGINEER.

G7 BACKFILL: NO EARTH SHALL BE BACKFILLED AGAINST THE CONCRETE STRUCTURE UNTIL THE COMPLETED CONCRETE STRUCTURE HAS REACHED 80% OF ITS DESIGN STRENGTH.

CONCRETE

C1 CODE: CONCRETE WORK AND REINFORCEMENT SHALL CONFORM TO ALL REQUIREMENTS OF ACI 318. CONCRETE STRENGTHS SHALL BE VERIFIED BY STANDARD 28-DAY CYLINDER TESTS UNLESS OTHERWISE APPROVED.

C2 CONCRETE STRENGTH:

USE	STRENGTH fc'
WALLS, BEAMS, STRUCTURAL SLABS, COLUMNS, PIPE SUPPORTS	3000 PSI
EQUIPMENT PADS, SIDEWALKS	3000 PSI
LEAN CONCRETE FILL	1500 PSI
ALL OTHER CONCRETE	3000 PSI

C3 MINIMUM REINFORCEMENT:
WALL REINFORCING: (UNLESS NOTED OTHERWISE)

THICKNESS	HORIZONTAL	VERTICAL
8" WALL & UNDER	#5 @ 12"@ ℄	#5 @ 12" AT CL
10" WALL	#4 @ 12" EF	#4 @ 12" EF
12" WALL	#5 @ 12" EF	#5 @ 12" EF

C4 REINFORCING STEEL: ALL REINFORCING STEEL SHALL BE IN ACCORDANCE WITH ASTM A-615, GRADE 60, FOR DEFORMED BARS AND ASTM A-185 (FY - 65,000 PSI) FOR SMOOTH WELDED WIRE FABRIC (WWF), UNLESS OTHERWISE NOTED.

C5 REINFORCING STEEL DETAILS:
REINFORCING STEEL SHALL HAVE PROTECTION AS FOLLOWS (UNLESS OTHERWISE NOTED):

USE	COVER
BEAMS AND COLUMN BARS	1 1/2" (TO STIRRUPS)
SLAB BARS	1 1/2"
WALL BARS: INTERIOR FACES	1 1/2
EXPOSED TO WEATHER OR EARTH	1 1/2" (#5 OR SMALLER) 2" (#6 OR LARGER)
FOOTING AND SLAB BARS CAST ON GROUND	3"
CONCRETE IN CONTACT WITH LIQUID	2"

C6 BAR LAP SPLICES: DOWELS SHALL BE SAME SIZE AND SPACING AS BARS WITH WHICH THEY ARE LAPPED. THE LAP EMBEDMENT SHALL BE EQUAL TO THE TENSION EMBEDMENT. VERTICAL REINFORCING BAR SPLICES IN COLUMNS SHALL HAVE AT LEAST 30 BAR DIAMETER LAP, UNO OR SHOWN ON DWG. ALL OTHER BAR SPLICES SHALL BE LAPPED AS FOLLOWS:

REINFORCEMENT LAP SPLICE AND EMBEDMENT LENGTH

BAR SIZE	BAR SPACING	** MIN. LAP LENGTH (IN.) TOP BARS CLASS A	TOP BARS CLASS B	OTHER BARS CLASS A	OTHER BARS CLASS B	** MIN. EMBEDMENT LGTH.(IN) STRAIGHT BARS TOP BARS	STRAIGHT BARS OTHER BARS	WITH STD. HOOK
#3	2 BARS DIAMETERS OR MORE	21	28	16	21	16	21	6
#4		28	37	21	28	21	28	8
#5		36	46	27	36	27	36	11
#6		43	55	33	43	33	43	13
#7		62	81	48	62	48	62	15
#8		71	92	54	71	54	71	17
#9		80	104	62	80	62	80	19
#10		89	115	68	89	68	89	21
#11		98	127	75	98	75	98	23

fc = 3,000 PSI fy = 60,000 PSI

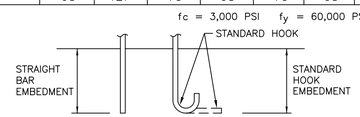

** FOR BAR CLEAR SPACING LESS THAN 2 BAR DIAMETER, ADD 50%

TOP BAR ARE ALL HORIZONTAL BARS PLACED SO THAT MORE THAN 12" INCHES OF FRESH CONCRETE IS CAST IN THE MEMBER BELOW THE BARS. HORIZONTAL WALL BARS ARE CONSIDERED TOP BARS.

USE SPLICE LENGTH CLASS B UNLESS NOTED OTHERWISE. THE SPLICES SHALL BE STAGGERED AT LEAST THE LENGTH OF THE LAP SPLICES. TOP BARS ARE HORIZONTAL BARS WITH MORE THAN 12" DEPTH OF FRESH CONCRETE CAST BELOW THE REINFORCEMENT.

C7 RESTRICTED BAR ANCHORAGE: IN CASES WHERE REINFORCING BARS CANNOT BE EXTENDED AS FAR AS REQUIRED DUE TO THE UNITED EXTENT OF THE ADJACENT CONCRETE STRUCTURE, THE BARS SHALL EXTEND AS FAR AS POSSIBLE AND END IN STANDARD HOOKS.

C8 CHAMFERS: EXCEPT AS OTHERWISE REQUIRED, EXPOSED CONCRETE CORNERS AND EDGES SHALL HAVE 3/4" CHAMFERS. RE-ENTRANT CORNERS SHALL NOT HAVE FILLETS UNLESS OTHERWISE SHOWN.

C9 ANCHOR BOLTS: ALL BOLTS SHALL BE STAINLESS STEEL UNLESS OTHERWISE NOTED. ADDITIONAL EMBEDMENT LENGTH REQUIRED FOR EQUIPMENT ANCHOR BOLTS SHALL BE DETERMINED BY THE EQUIPMENT SUPPLIER.

FOUNDATIONS

F1 FOOTING EXCAVATIONS SHALL BE INSPECTED AND APPROVED BY THE STRUCTURAL ENGINEER PRIOR TO PLACEMENT OF FOOTING CONCRETE.

STEEL

S1 STEEL SPECIFICATIONS:
DESIGN, FABRICATION AND ERECTION SHALL BE IN ACCORDANCE WITH THE FOLLOWING SPECIFICATIONS:

STRUCTURAL STEEL:
AISC-SPECIFICATIONS FOR THE DESIGN, FABRICATION AND ERECTION OF STRUCTURAL STEEL FOR BUILDINGS - 9TH EDITION

WELDING:
AWS D1.1 - FOR AWS PREQUALIFIED JOINT DETAILS USE 3/16" MIN WELDS (UNLESS OTHERWISE NOTED)

WELDER CERTIFICATION:
CERTIFY WELDING PERSONNEL IN ACCORDANCE WITH AWS

S2 FABRICATION AND ERECTION:
THE CONTRACTOR SHALL BE RESPONSIBLE FOR ALL ERECTION AIDS AND JOINT PREPARATION THAT INCLUDE BUT ARE NOT LIMITED TO: ERECTION ANGLES; LIFT HOLES; WELDING PROCEDURES; GROOVE ANGLES; BACKING BARS, COPES; SURFACE ROUGHNESS VALUES; AND TAPERS OF UNEQUAL PARTS.

S3 STEEL MATERIALS:
STRUCTURAL STEEL -ASTM A 36, A992
CONNECTION MATERIAL, CHANNELS, ANGLES, BASE PLATES, AND MISC. STEEL -ASTM A36
EMBEDDED ITEMS - 316SS OR 304SS
STEEL TUBE -ASTM A500 GRADE B
STRUCTURAL BOLTS -ASTM A325 N
ANCHOR BOLTS -ASTM A325 GALVANIZED
THREADED RODS -ASTM A36, A449
WELDING ELECTRODES -E70XX

S4 BASE PLATE GROUT: BASE PLATE GROUT SHALL BE AN APPROVED NONSHRINK CEMENTITIOUS GROUT CONTAINING NATURAL AGGREGATES DELIVERED TO THE JOBSITE IN FACTORY PREPACKAGED CONTAINERS REQUIRING ONLY THE ADDITION OF WATER. MINIMUM 28-DAY COMPRESSIVE STRENGTH SHALL BE 5000 PSI.

S5 ENCASED STEEL: STEEL COMPLETELY ENCASED IN CONCRETE SHALL NOT BE GALVANIZED OR PAINTED AND SHALL HAVE A CLEAN SURFACE FOR BONDING TO CONCRETE.

S6 PAINTING: STRUCTURAL STEEL SHALL BE HOT DIP GALVANIZED IN ACCORDANCE WITH SPECIFICATION SECTION 9800

S7 GRATING: ALL GRATING SHALL BE GALVANIZED STEEL EXCEPT WHERE NOTED AS FRP. SEE TYPICAL SPECIFICATION SHT 3S1.

S8 ANCHORAGE TO EXISTING CONCRETE: EPOXY ADHESIVE ANCHORS UNLESS NOTED OTHERWISE.

S9 HANDRAILS SHALL BE HOT DIP GALVANIZED.

S10 TRASHRACKS SHALL BE HOT DIP GALVANIZED.

INSPECTIONS

SPECIAL INSPECTIONS WILL BE REQUIRED FOR THE FOLLOWING WORK:

1. STRUCTURAL CONCRETE TEST CYLINDERS.
2. BOLTS AND EMBEDS INSTALLED IN CONCRETE.
3. INSTALLATION OF DRILLED AND GROUTED DOWELS AND ANCHORS.
4. REINFORCING STEEL.
5. STRUCTURAL STEEL FABRICATION AND ERECTION.
6. HIGH-STRENGTH BOLT INSTALLATIONS AND TIGHTENING OPERATIONS.
7. FIELD WELDING
8. EXCAVATION AND SOIL COMPACTION.

ABBREVIATIONS

EL - ELEVATION
OC - ON CENTER
SHT - SHEET
TOS - TOP OF SLAB
TOF - TOP OF FOOTING
TOW - TOP OF WALL
TYP - TYPICAL
UNO - UNLESS NOTED OTHERWISE

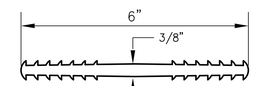

WATERSTOP

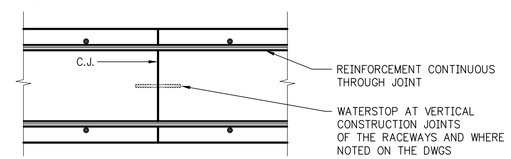

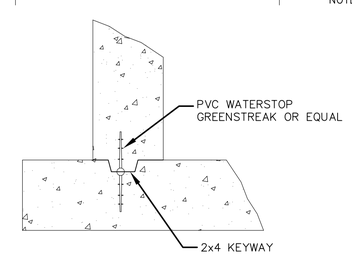

AT WATER RETAINING STRUCTURES

CONSTRUCTION JOINT DETAILS

NOT TO BE USED FOR CONSTRUCTION

90% DESIGN SUBMITTAL

0 1"

BAR MEASURES ONE INCH ON ORIGINAL DRAWINGS

Resource Consultants, Inc.
REDMOND, WA.

SAP#	
PL#	
DATE 1-16-09	
ENG AJD/R2	DES AJD/R2
DR AJD/R2	CH
APPROVAL	

LRH IMPLEMENTATION
POND 13-14 MODIFICATIONS
STRUCTURAL NOTES

PACIFICORP ENERGY
A PACIFICORP COMPANY

HYDRO

SCALE: NONE | SHEET 026 | 116100 | REV.

PLOTTED: 4/15/2009 2:35:05 PM
SAVED:
CYONET ID:
D161578

No.	DATE	REVISION	BY	CHK	APP	DRAWING No.	REFERENCE DRAWINGS

PLOT SCALE: 1 =

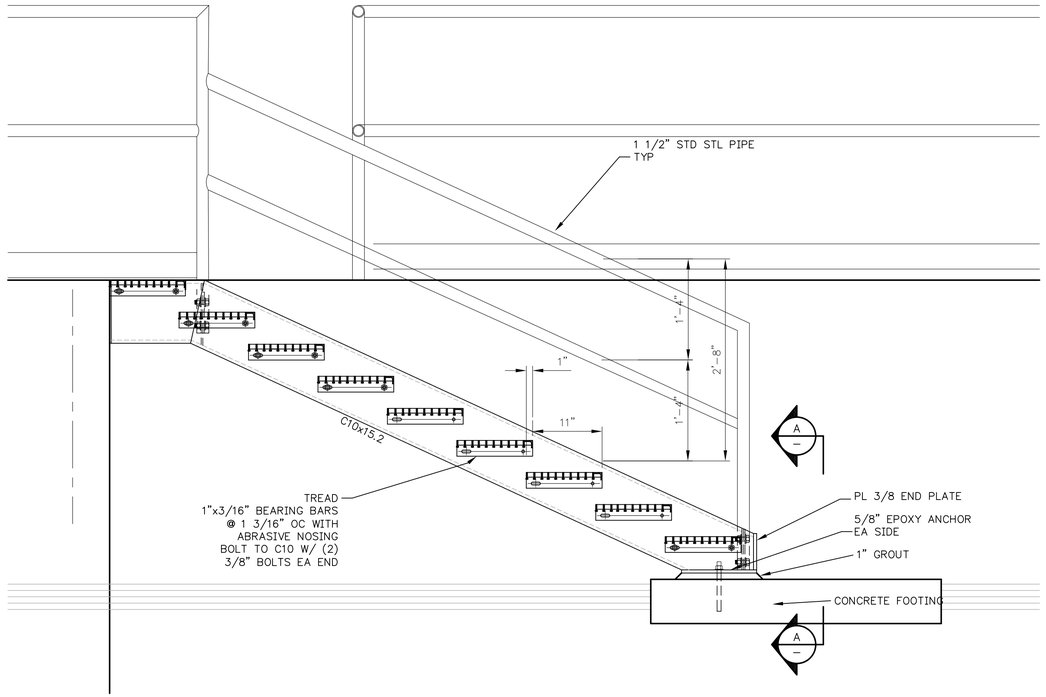

TYPICAL STAIRWAY ELEVATION

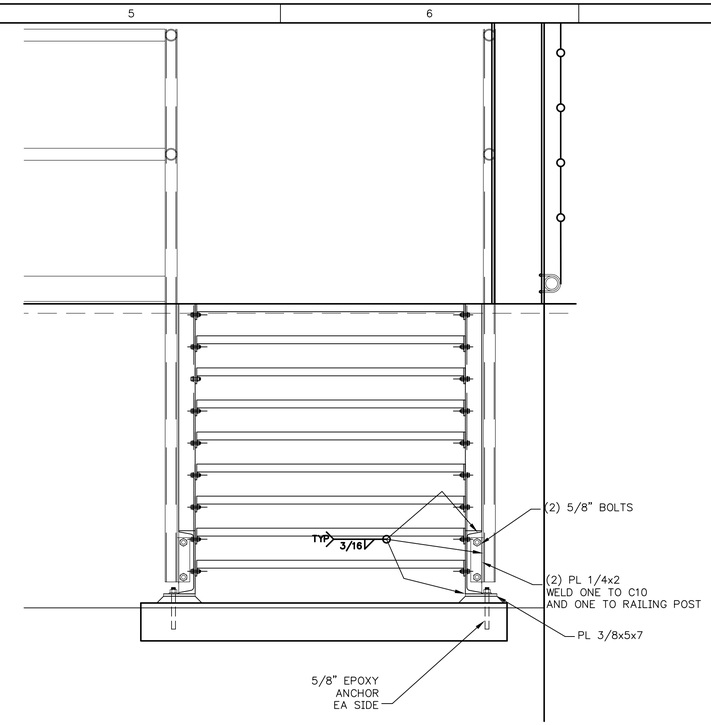

SECTION (A / —)
1" = 1'-0"

TYPICAL STAIR DETAIL (1 / 030) (1 / 031)
SCALE: 1" = 1'-0"

NOT TO BE USED
FOR CONSTRUCTION

90% DESIGN SUBMITTAL

0 1"
BAR MEASURES ONE INCH
ON ORIGINAL DRAWINGS

Resource Consultants, Inc.
REDMOND, WA.

SAP#	
PL#	
DATE 1-16-09	
ENG AJD/R2	DES AJD/R2
DR AJD/R2	CH
APPROVAL	

LRH IMPLEMENTATION
POND 13-14 MODIFICATIONS
STRUCTURAL DETAILS

PACIFICORP ENERGY
A PACIFICORP COMPANY

HYDRO

SCALE: AS SHOWN | SHEET 027 | 116100 | REV.

No.	DATE	REVISION	BY	CHK	APP

No.	DATE	REVISION	BY	CHK	APP

DRAWING No.	REFERENCE DRAWINGS
DRAWING No.	REFERENCE DRAWINGS

PLOT SCALE: 1 =

PLOTTED: 4/15/2009 2:35:12 PM
SAVED:
CTONET ID:

D161578

BORDER REVISED 10/31/08 SLM

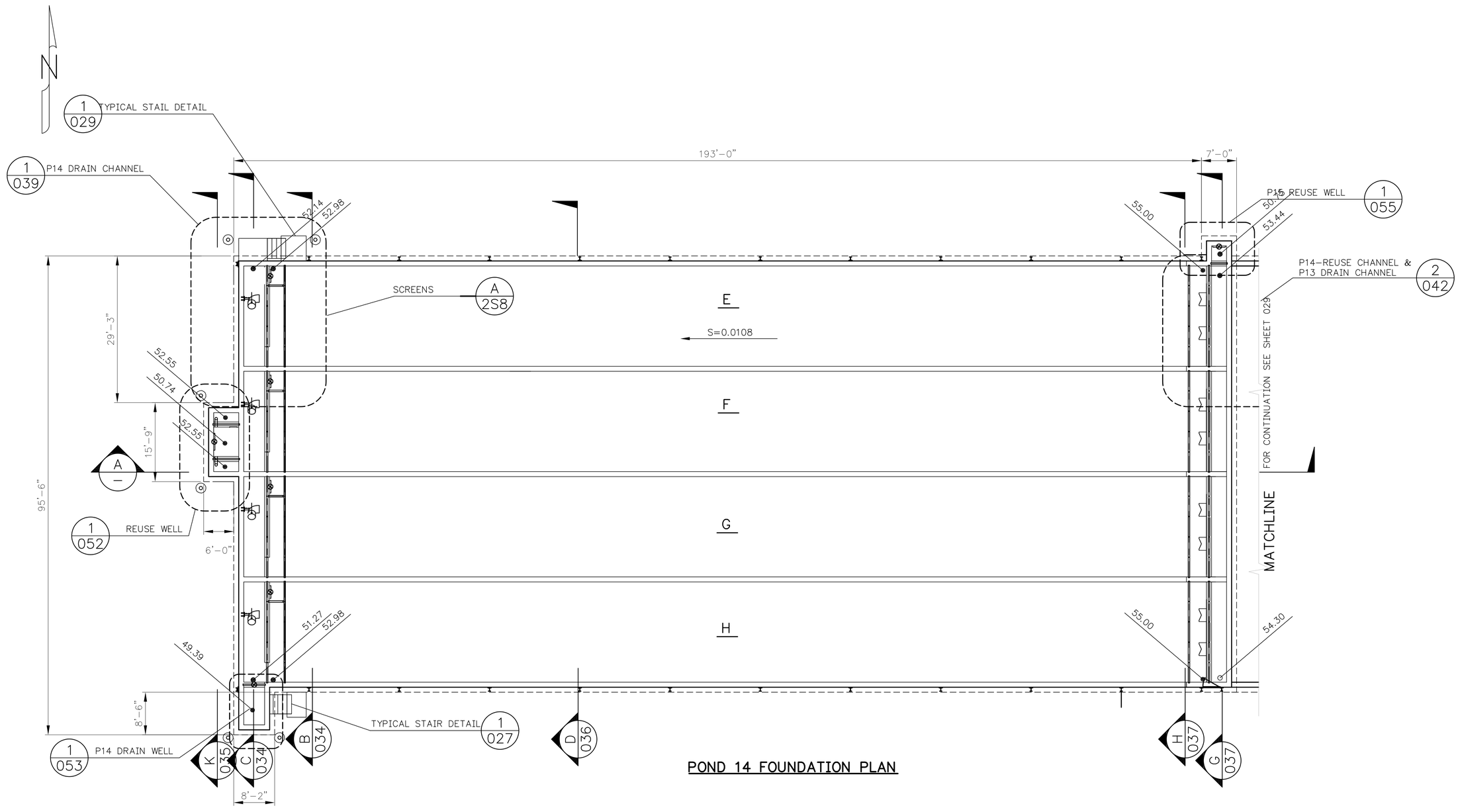

POND 14 FOUNDATION PLAN

NOT TO BE USED FOR CONSTRUCTION

90% DESIGN SUBMITTAL

0 10 20
SCALE: 1" = 20'

0 1"
BAR MEASURES ONE INCH ON ORIGINAL DRAWINGS

Resource Consultants, Inc.
REDMOND, WA.

SAP#	
PL#	
DATE 1-16-09	
ENG AJD/R2	DES AJD/R2
DR AJD/R2	CH
APPROVAL	

LRH IMPLEMENTATION
POND 13-14 MODIFICATIONS
POND 14
FOUNDATION PLAN

PACIFICORP ENERGY
A PACIFICORP COMPANY
HYDRO

SCALE: AS SHOWN | SHEET 028 | 116100 | REV.

No.	DATE	REVISION	BY	CHK	APP	DRAWING No.	REFERENCE DRAWINGS

PLOT SCALE: 1 =

PLOTTED: 4/15/2009 2:35:22 PM
SAVED:
CYONET ID:

D161578

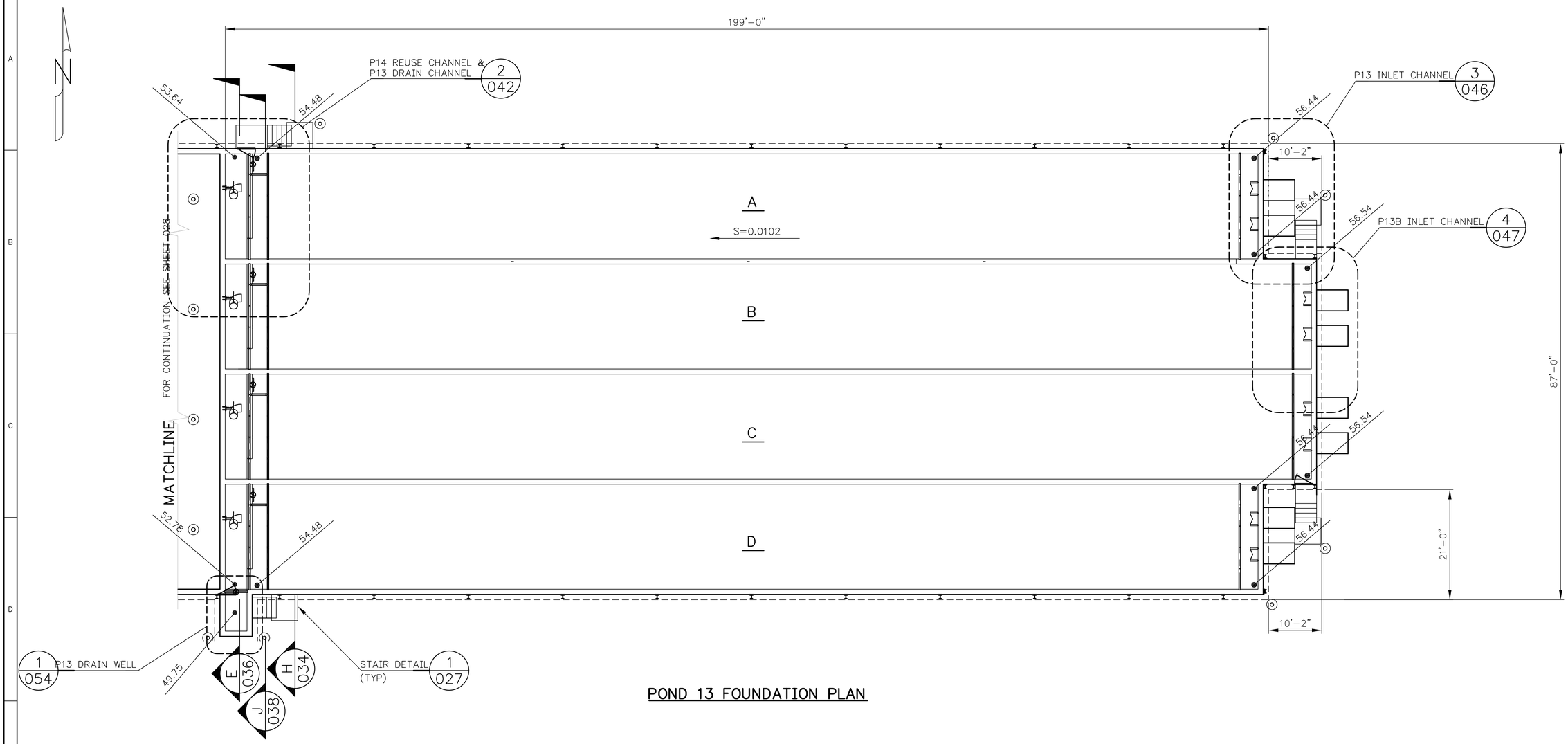

POND 13 FOUNDATION PLAN

NOT TO BE USED
FOR CONSTRUCTION

90% DESIGN SUBMITTAL

0 10 20
SCALE: 1" = 20'

0 1"
BAR MEASURES ONE INCH
ON ORIGINAL DRAWINGS

Resource Consultants, Inc.
REDMOND, WA.

SAP#	
PL#	
DATE	1-16-09
ENG	AJD/R2
DES	AJD/R2
DR	AJD/R2
CH	
APPROVAL	

LRH IMPLEMENTATION
POND 13-14 MODIFICATIONS
POND 13
FOUNDATION PLAN

PACIFICORP ENERGY
A PACIFICORP COMPANY
HYDRO

SCALE: AS SHOWN | SHEET 029 | 116100 | REV.

PLOTTED: 4/15/2009 2:35:27 PM
SAVED:
CYONET ID:
D161578

PLOT SCALE: 1 =

No.	DATE	REVISION	BY	CHK	APP	No.	DATE	REVISION	BY	CHK	APP	DRAWING No.	REFERENCE DRAWINGS	DRAWING No.	REFERENCE DRAWINGS

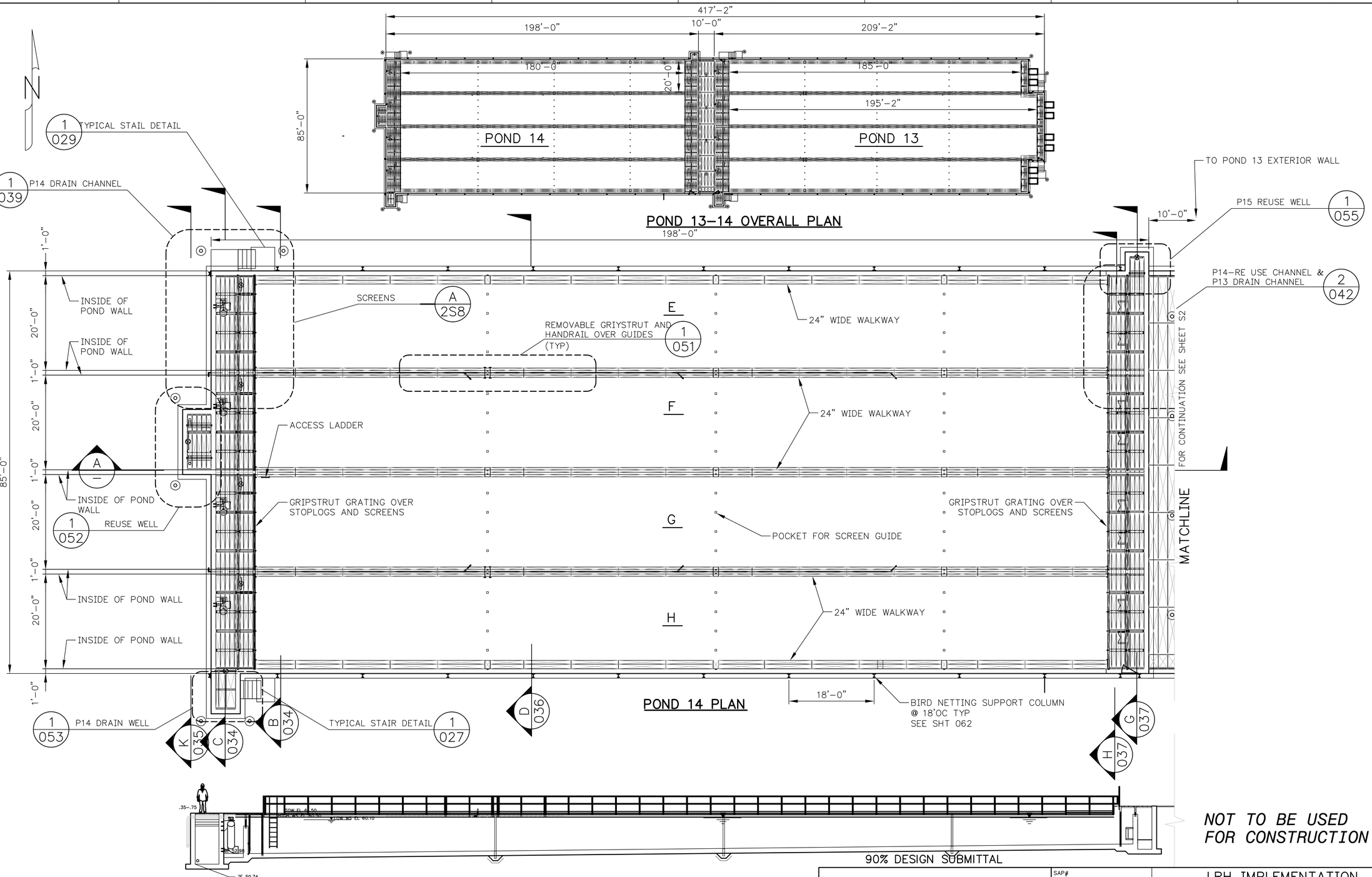

NOT TO BE USED FOR CONSTRUCTION

SECTION A/—

0 10 20
SCALE: 1" = 20'

0 1"
BAR MEASURES ONE INCH ON ORIGINAL DRAWINGS

Resource Consultants, Inc.
REDMOND, WA.

SAP#	
PL#	
DATE 1-16-09	
ENG AJD/R2	DES AJD/R2
DR AJD/R2	CH
APPROVAL	

LRH IMPLEMENTATION
POND 13-14 MODIFICATIONS
POND 14
DECK PLAN

PACIFICORP ENERGY
A PACIFICORP COMPANY
HYDRO

SCALE: AS SHOWN | SHEET 030 | 116100 | REV.

PLOTTED: 4/15/2009 2:35:32 PM
SAVED:
CTONET ID:
D161578

No.	DATE	REVISION	BY	CHK	APP	No.	DATE	REVISION	BY	CHK	APP	DRAWING No.	REFERENCE DRAWINGS	DRAWING No.	REFERENCE DRAWINGS

PLOT SCALE: 1 =

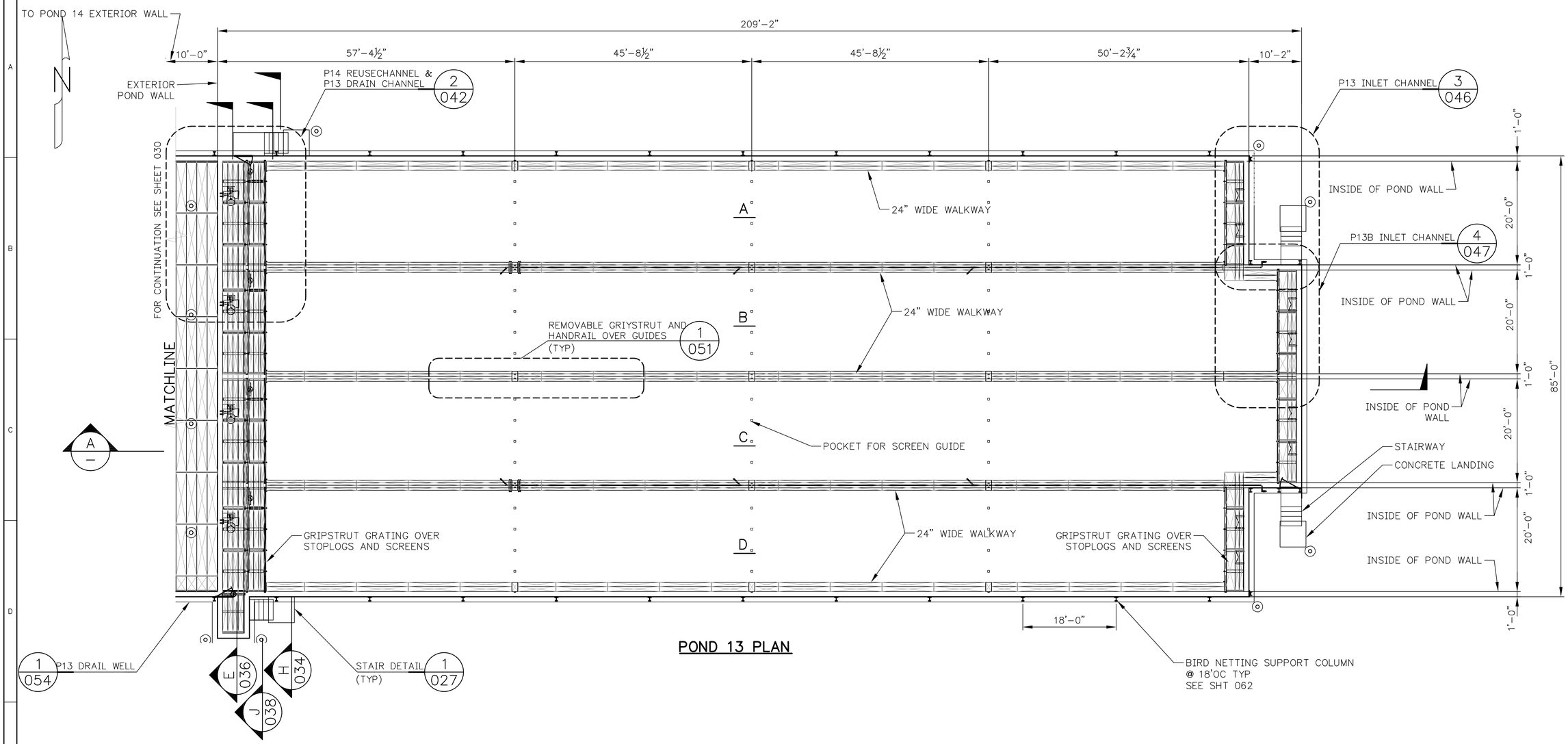

POND 13 PLAN

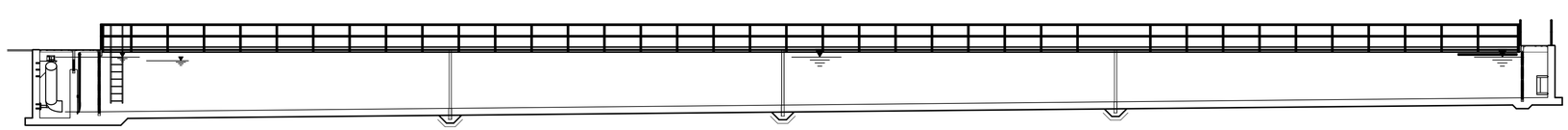

NOT TO BE USED FOR CONSTRUCTION
90% DESIGN SUBMITTAL

SECTION A/—

0 10 20
SCALE: 1" = 20'

0 1"
BAR MEASURES ONE INCH ON ORIGINAL DRAWINGS

Resource Consultants, Inc.
REDMOND, WA.

SAP#	
PL#	
DATE	1-16-09
ENG AJD/R2	DES AJD/R2
DR AJD/R2	CH
APPROVAL	

LRH IMPLEMENTATION
POND 13-14 MODIFICATIONS
POND 13
DECK PLAN

PACIFICORP ENERGY
A PACIFICORP COMPANY
HYDRO

SCALE: AS SHOWN | SHEET 031 | 116100 | REV.

PLOTTED: 4/15/2009 2:35:42 PM
SAVED:
CYONET ID:
D161578

PLOT SCALE: 1 =

No.	DATE	REVISION	BY	CHK	APP	DRAWING No.	REFERENCE DRAWINGS

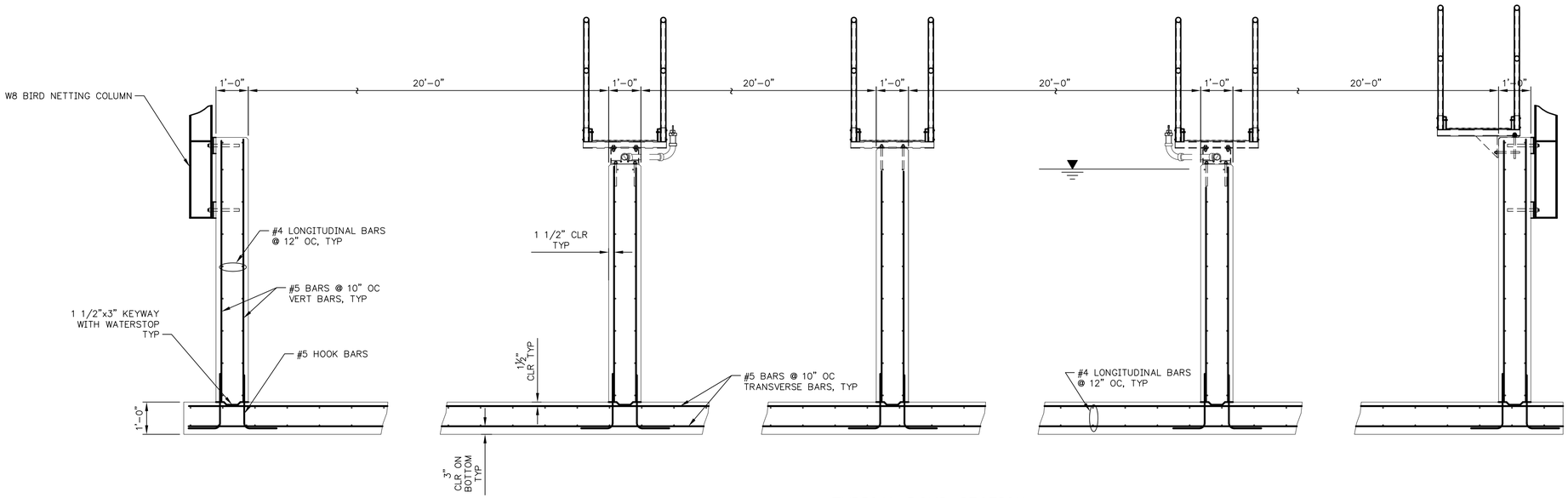

TYPICAL POND SECTION

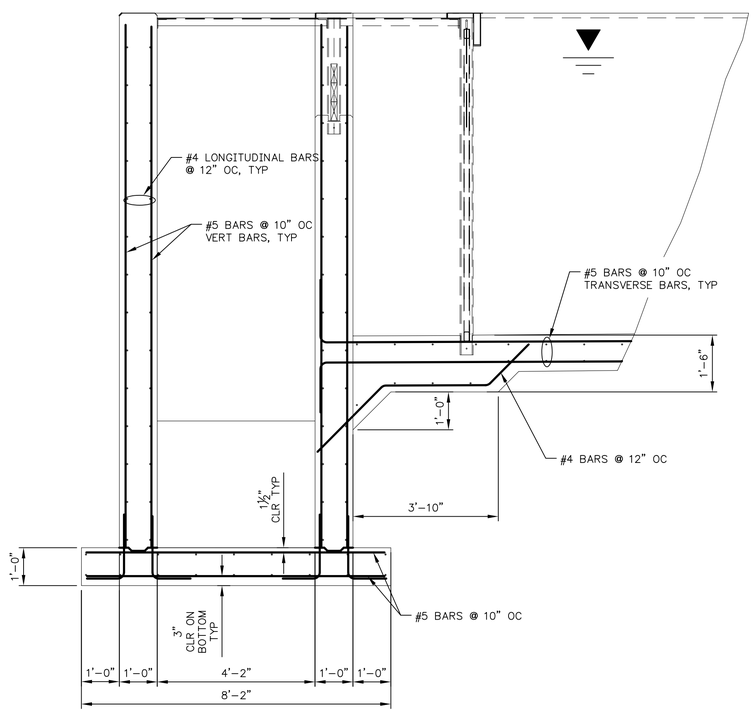

TYPICAL POND SECTION

12" 6" 0 1' 2' 3' 4' 5'
1/2"=1'-0"

0 1"
BAR MEASURES ONE INCH ON ORIGINAL DRAWINGS

NOT TO BE USED FOR CONSTRUCTION

90% DESIGN SUBMITTAL

Resource Consultants, Inc.
REDMOND, WA.

SAP#	
PL#	
DATE 1-16-09	
ENG AJD/R2	DES AJD/R2
DR AJD/R2	CH
APPROVAL	

LRH IMPLEMENTATION
POND 13-14 MODIFICATIONS
GENERAL STRUCTURAL SECTION

PACIFICORP ENERGY
A PACIFICORP COMPANY

HYDRO

SCALE: 1"=5' | SHEET 032 | 116100 | REV.

PLOTTED: 4/15/2009 2:35:52 PM
SAVED:
CYGNET ID:
D161578

PLOT SCALE: 1 =

No.	DATE	REVISION	BY	CHK	APP	No.	DATE	REVISION	BY	CHK	APP	DRAWING No.	REFERENCE DRAWINGS	DRAWING No.	REFERENCE DRAWINGS

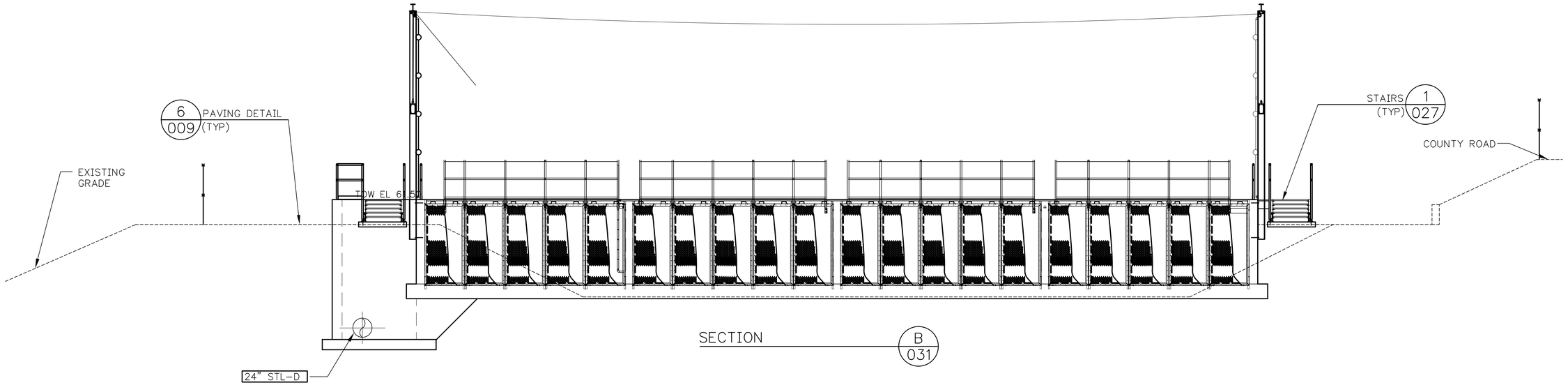

SECTION B 031

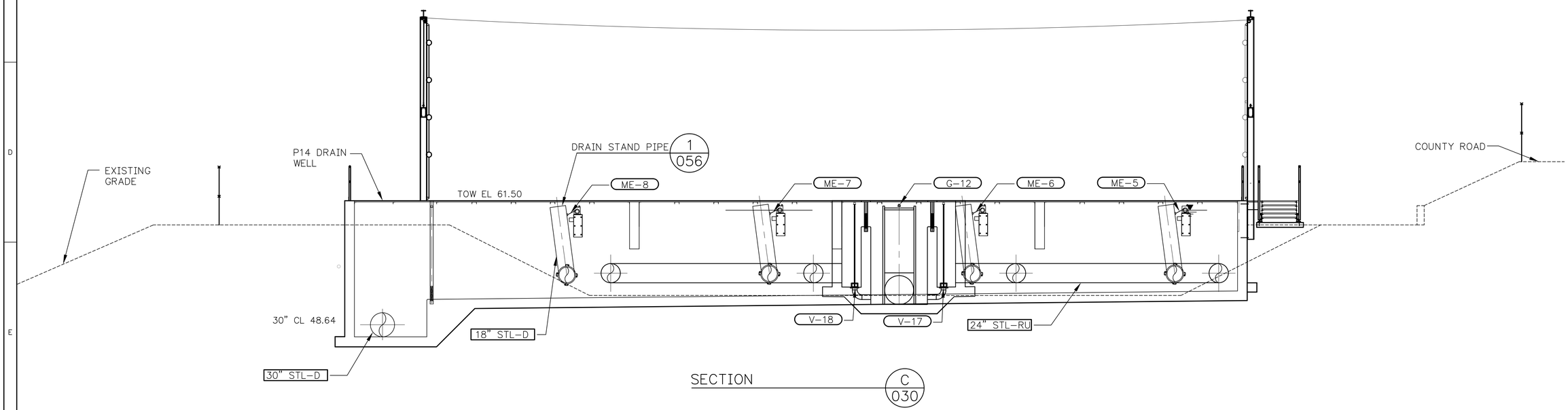

SECTION C 030

NOT TO BE USED
FOR CONSTRUCTION

90% DESIGN SUBMITTAL

0 2' 4' 8' 16'
SCALE: 3/16" = 1'-0"

0 1"

BAR MEASURES ONE INCH
ON ORIGINAL DRAWINGS

Resource Consultants, Inc.
REDMOND, WA.

SAP#	
PL#	
DATE	1-16-09
ENG AJD/R2	DES AJD/R2
DR AJD/R2	CH
APPROVAL	

LRH IMPLEMENTATION
POND 13-14 MODIFICATIONS
POND 13/14
SECTIONS - I

PACIFICORP ENERGY
A PACIFICORP COMPANY

HYDRO

SCALE: 3/16"=1'-0" SHEET 034 116100 REV.

No.	DATE	REVISION	BY	CHK	APP	DRAWING No.	REFERENCE DRAWINGS

PLOT SCALE: 1 =

PLOTTED: 4/15/2009 2:35:57 PM
SAVED:
CYONET ID:

D161578

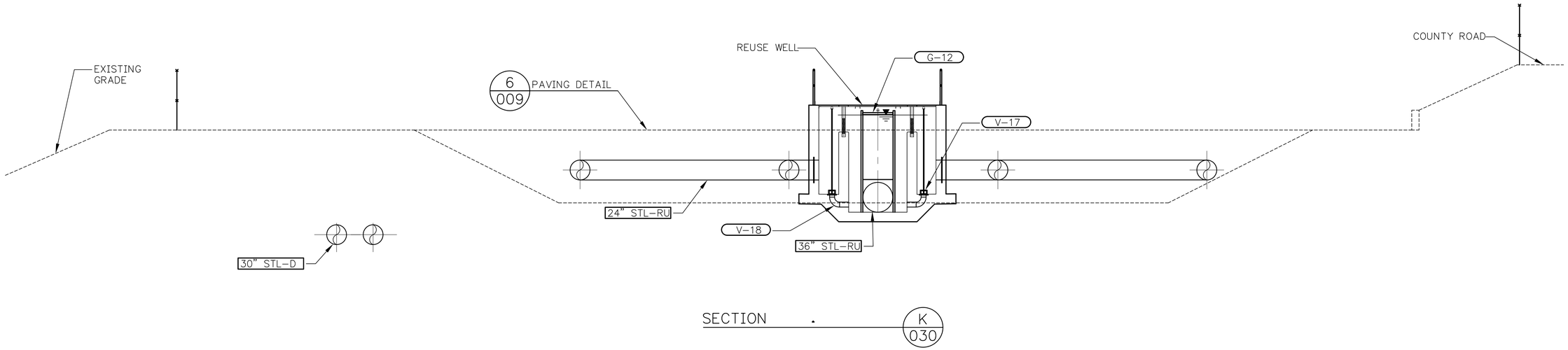

SECTION K 030

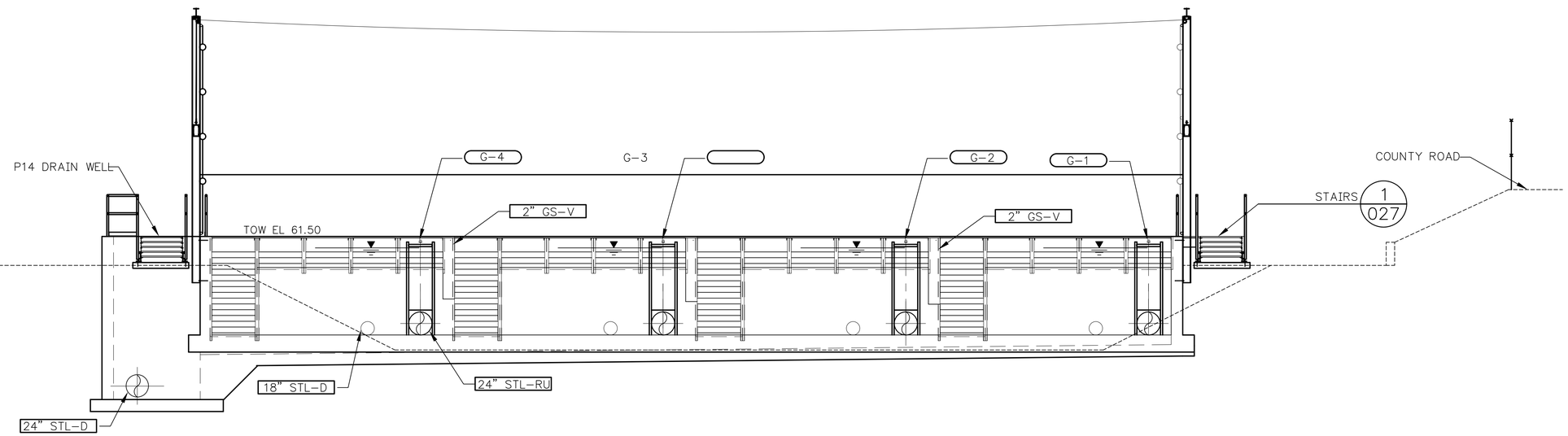

SECTION L 030

NOT TO BE USED FOR CONSTRUCTION

90% DESIGN SUBMITTAL

0 2' 4' 8' 16'

SCALE: 3/16" = 1'-0"

0 1"

BAR MEASURES ONE INCH ON ORIGINAL DRAWINGS

Resource Consultants, Inc.
REDMOND, WA.

SAP#	
PL#	
DATE 1-16-09	
ENG AJD/R2	DES AJD/R2
DR AJD/R2	CH
APPROVAL	

LRH IMPLEMENTATION
POND 13-14 MODIFICATIONS
POND 13/14
SECTIONS - II

PACIFICORP ENERGY
A PACIFICORP COMPANY

HYDRO

SCALE: 3/16"=1'-0" SHEET 035 116100 REV.

No.	DATE	REVISION	BY	CHK	APP	DRAWING No.	REFERENCE DRAWINGS

PLOT SCALE: 1 =

PLOTTED: 4/15/2009 2:36:07 PM
SAVED:
CYONET ID:

D161578

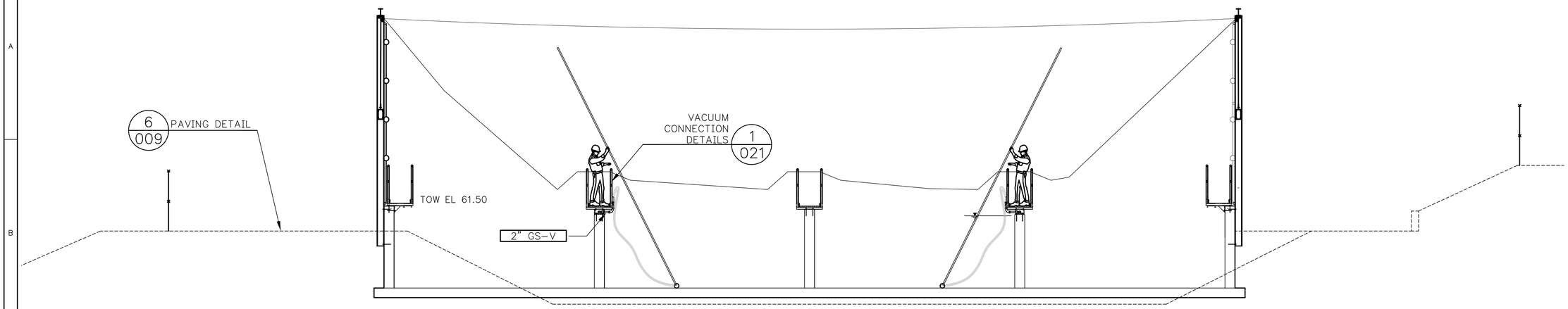

SECTION D 030

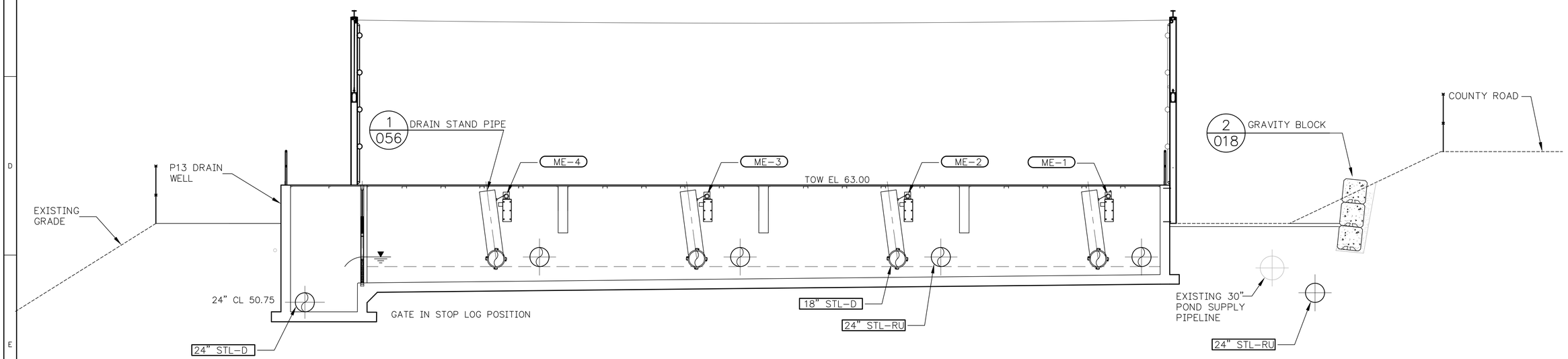

SECTION E 031

NOT TO BE USED
FOR CONSTRUCTION

90% DESIGN SUBMITTAL

0 2' 4' 8' 16'
SCALE: 3/16" = 1'-0"
0 1"
BAR MEASURES ONE INCH
ON ORIGINAL DRAWINGS

Resource Consultants, Inc.
REDMOND, WA.

SAP#	
PL#	
DATE 1-16-09	
ENG AJD/R2	DES AJD/R2
DR AJD/R2	CH
APPROVAL	

LRH IMPLEMENTATION
POND 13-14 MODIFICATIONS
POND 13
SECTIONS - III

PACIFICORP ENERGY
A PACIFICORP COMPANY
HYDRO

SCALE: 3/16"=1'-0" SHEET 036 116100 REV.

No.	DATE	REVISION	BY	CHK	APP	DRAWING No.	REFERENCE DRAWINGS

PLOT SCALE: 1 =

PLOTTED: 4/15/2009 2:36:17 PM
SAVED:
CYONET ID:
D161578

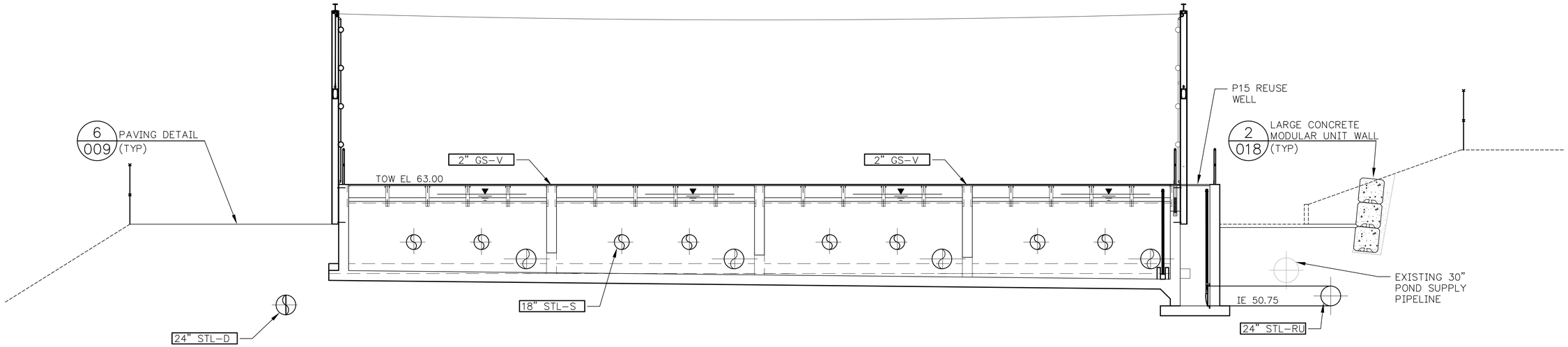

SECTION G/030

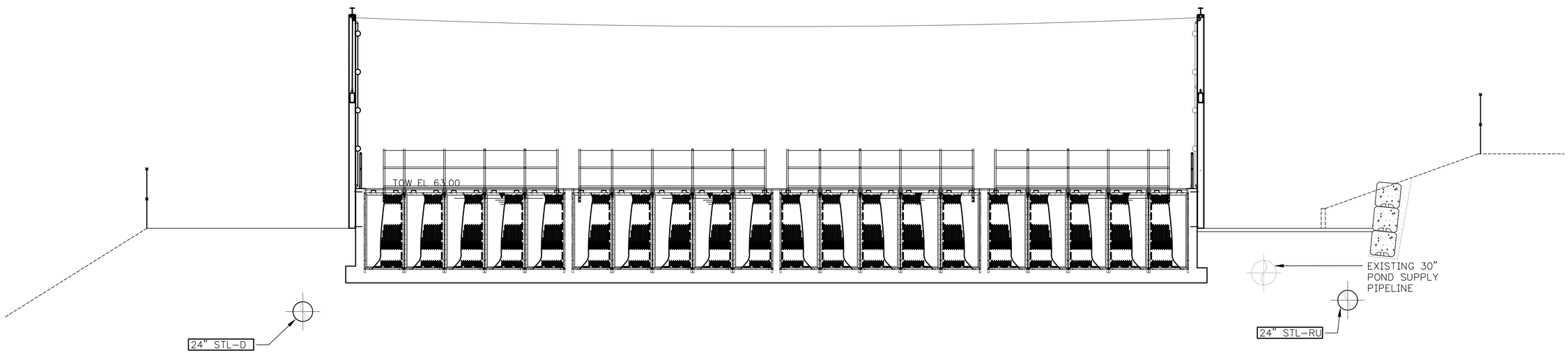

SECTION H/030

NOT TO BE USED FOR CONSTRUCTION

90% DESIGN SUBMITTAL

0 2' 4' 8' 16'

SCALE: 3/16" = 1'-0"

0 1"

BAR MEASURES ONE INCH ON ORIGINAL DRAWINGS

Resource Consultants, Inc.
REDMOND, WA.

SAP#	
PL#	
DATE	1-16-09
ENG	AJD/R2 DES AJD/R2
DR	AJD/R2 CH
APPROVAL	

LRH IMPLEMENTATION
POND 13-14 MODIFICATIONS
POND 13/14
SECTIONS - IV

PACIFICORP ENERGY
A PACIFICORP COMPANY

HYDRO

SCALE: 3/16"=1'-0" SHEET 037 116100 REV.

PLOTTED: 4/15/2009 2:36:27 PM
SAVED:
CVONET ID:

D161578

PLOT SCALE: 1 =

No.	DATE	REVISION	BY	CHK	APP	No.	DATE	REVISION	BY	CHK	APP	DRAWING No.	REFERENCE DRAWINGS	DRAWING No.	REFERENCE DRAWINGS

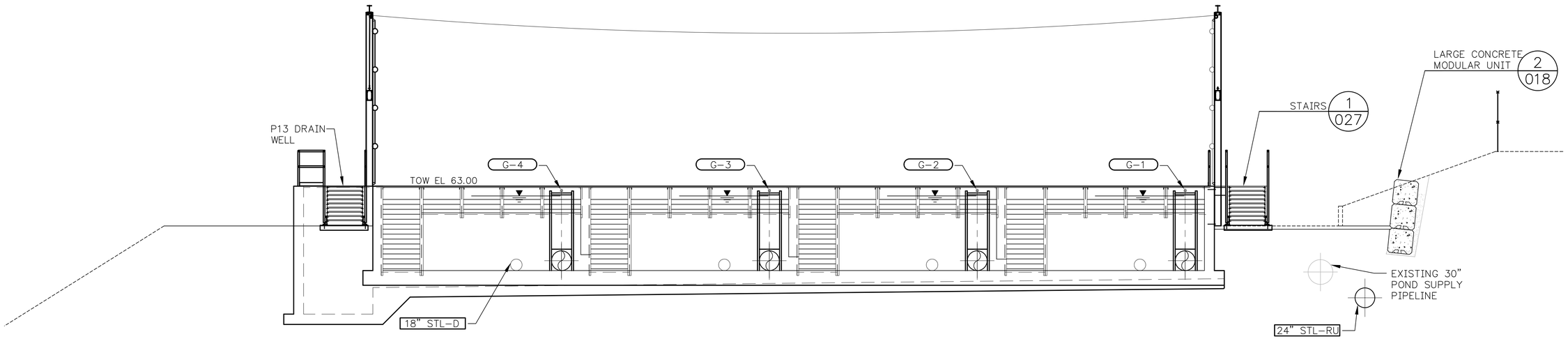

SECTION J/031

NOT TO BE USED FOR CONSTRUCTION

90% DESIGN SUBMITTAL

0 2' 4' 8' 16'

SCALE: 3/16" = 1'-0"

0 1"

BAR MEASURES ONE INCH ON ORIGINAL DRAWINGS

Resource Consultants, Inc.
REDMOND, WA.

SAP#	
PL#	
DATE 1-16-09	
ENG AJD/R2	DES AJD/R2
DR AJD/R2	CH
APPROVAL	

LRH IMPLEMENTATION
POND 13-14 MODIFICATIONS
POND 13
SECTIONS - V

PACIFICORP ENERGY
A PACIFICORP COMPANY

HYDRO

SCALE: 3/16"=1'-0" SHEET 038 116100 REV.

No.	DATE	REVISION	BY	CHK	APP	No.	DATE	REVISION	BY	CHK	APP	DRAWING No.	REFERENCE DRAWINGS	DRAWING No.	REFERENCE DRAWINGS

PLOT SCALE: 1 =

PLOTTED: 4/15/2009 2:36:37 PM
SAVED:
CYONET ID:

D161578

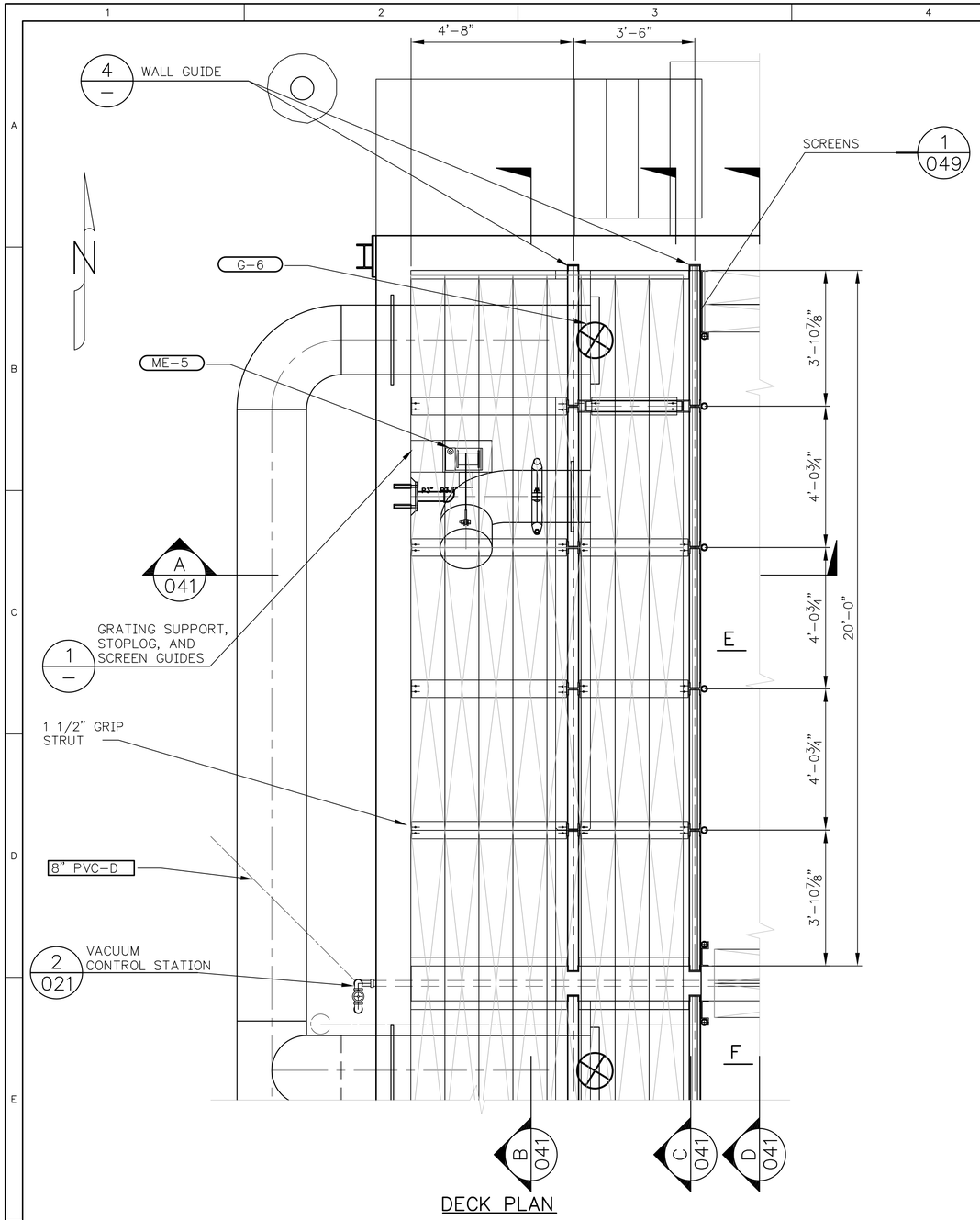

DECK PLAN

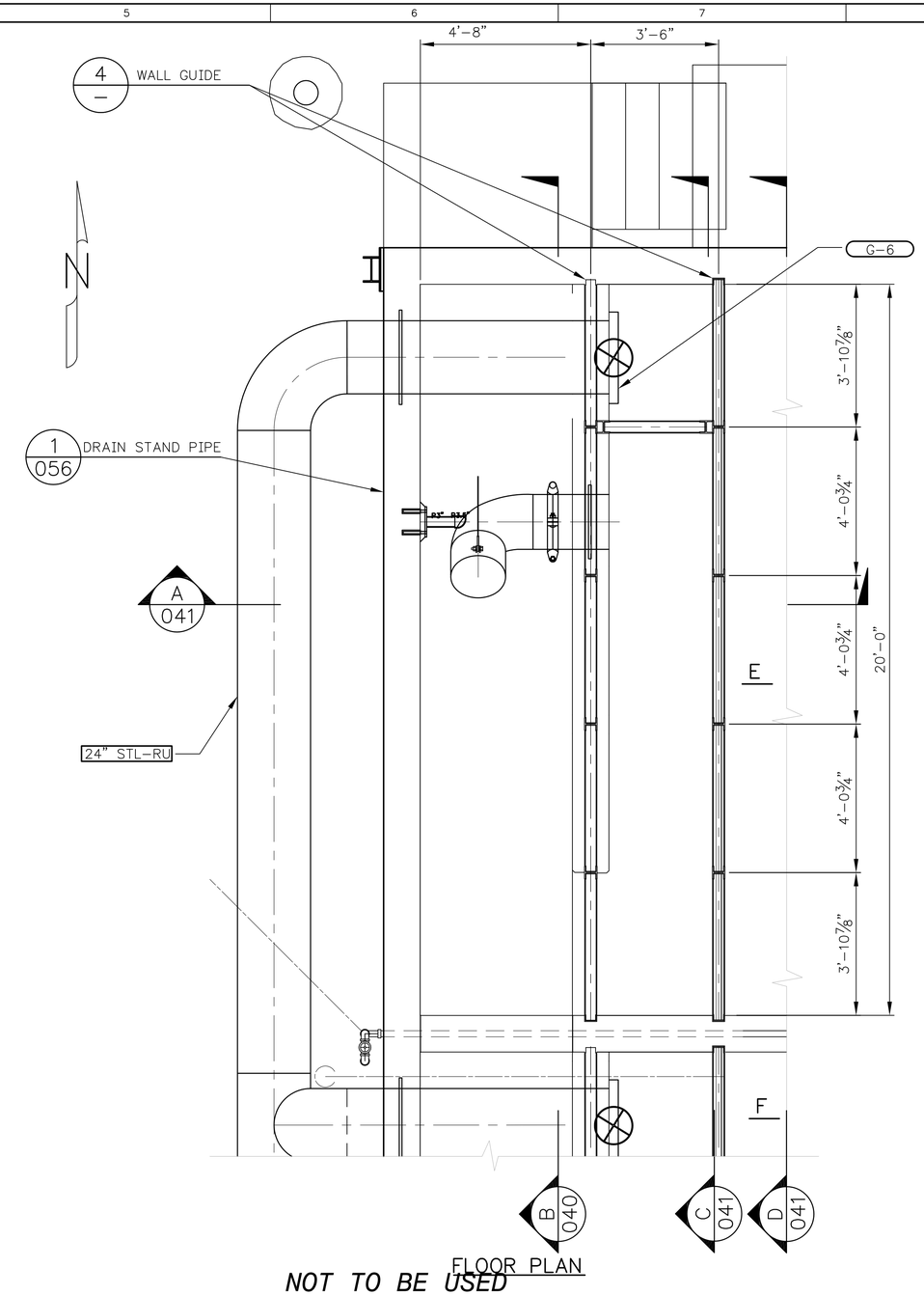

FLOOR PLAN

NOT TO BE USED FOR CONSTRUCTION

90% DESIGN SUBMITTAL

P14 DRAIN CHANNEL 1/030

0 6" 1' 2' 4'

SCALE: 1/2" = 1'-0"

0 1"

BAR MEASURES ONE INCH ON ORIGINAL DRAWINGS

Resource Consultants, Inc.
REDMOND, WA.

SAP#	
PL#	
DATE 1-16-09	
ENG AJD/R2	DES AJD/R2
DR AJD/R2	CH
APPROVAL	

LRH IMPLEMENTATION
POND 13-14 MODIFICATIONS
POND 14 – DRAIN CHANNEL
DECK PLAN & FLOOR PLAN

PACIFICORP ENERGY
A PACIFICORP COMPANY

HYDRO

SCALE: 1/2"=1'-0" | SHEET 039 | 116100 | REV.

No.	DATE	REVISION	BY	CHK	APP	No.	DATE	REVISION	BY	CHK	APP	DRAWING No.	REFERENCE DRAWINGS	DRAWING No.	REFERENCE DRAWINGS

PLOT SCALE: 1 =

PLOTTED: 4/15/2009 2:36:42 PM
SAVED:
CYONET ID:

D161578

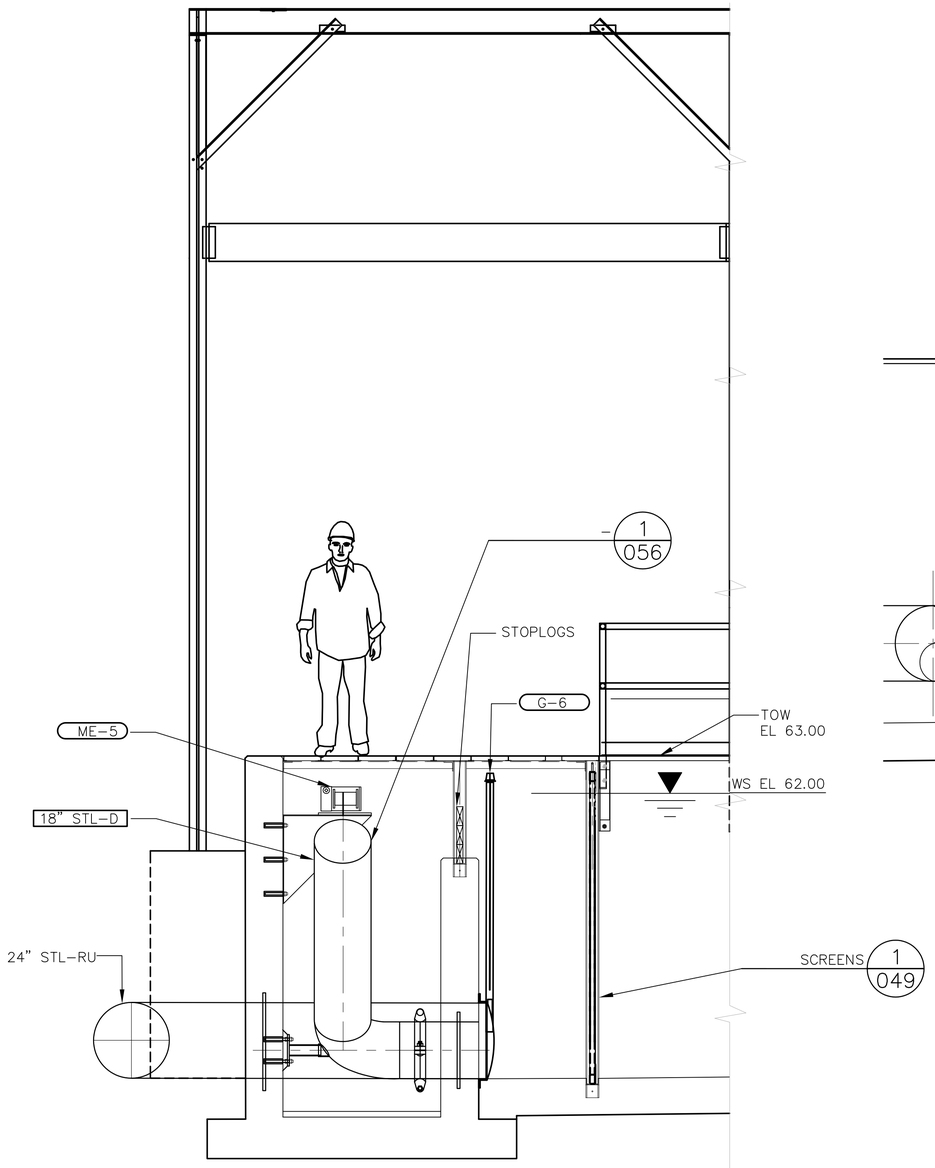

SECTION A 039

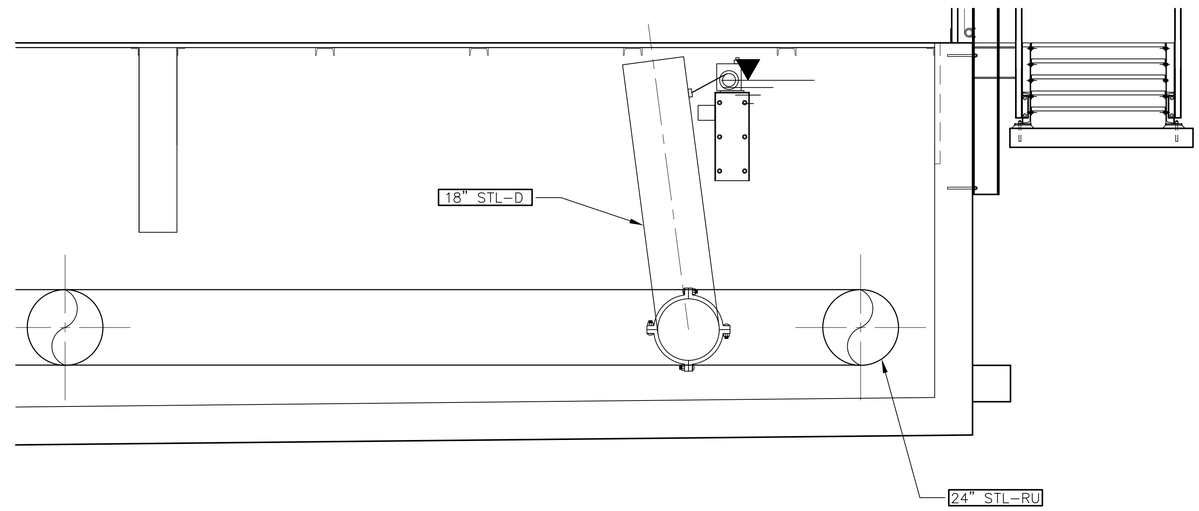

SECTION 13 039

0 6" 1' 2' 4'

SCALE: 1/2" = 1'-0"

NOT TO BE USED FOR CONSTRUCTION

90% DESIGN SUBMITTAL

0 1"

BAR MEASURES ONE INCH ON ORIGINAL DRAWINGS

Resource Consultants, Inc.
REDMOND, WA.

SAP#		
PL#		
DATE 1-16-09		
ENG AJD/R2	DES AJD/R2	
DR AJD/R2	CH	
APPROVAL		

LRH IMPLEMENTATION
POND 13-14 MODIFICATIONS
POND 14 - DRAIN CHANNEL
SECTIONS - I

PACIFICORP ENERGY
A PACIFICORP COMPANY

HYDRO

SCALE: 1/2"=1'-0" | SHEET 040 | 116100 | REV.

PLOTTED: 4/15/2009 2:36:52 PM
SAVED:
CYGNET ID:

D161578

PLOT SCALE: 1 =

No.	DATE	REVISION	BY	CHK	APP	No.	DATE	REVISION	BY	CHK	APP	DRAWING No.	REFERENCE DRAWINGS	DRAWING No.	REFERENCE DRAWINGS

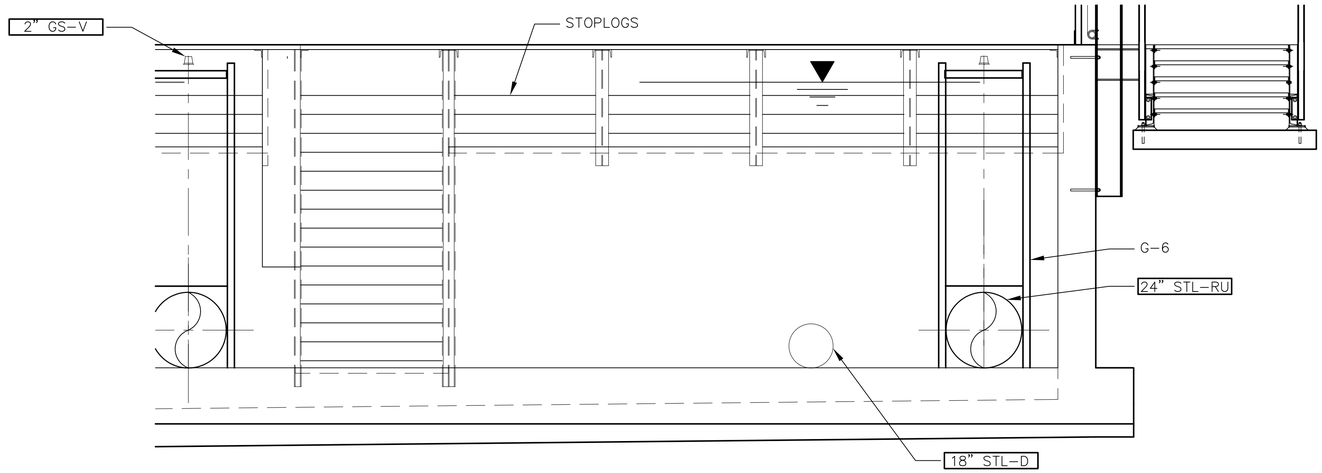

SECTION C/039

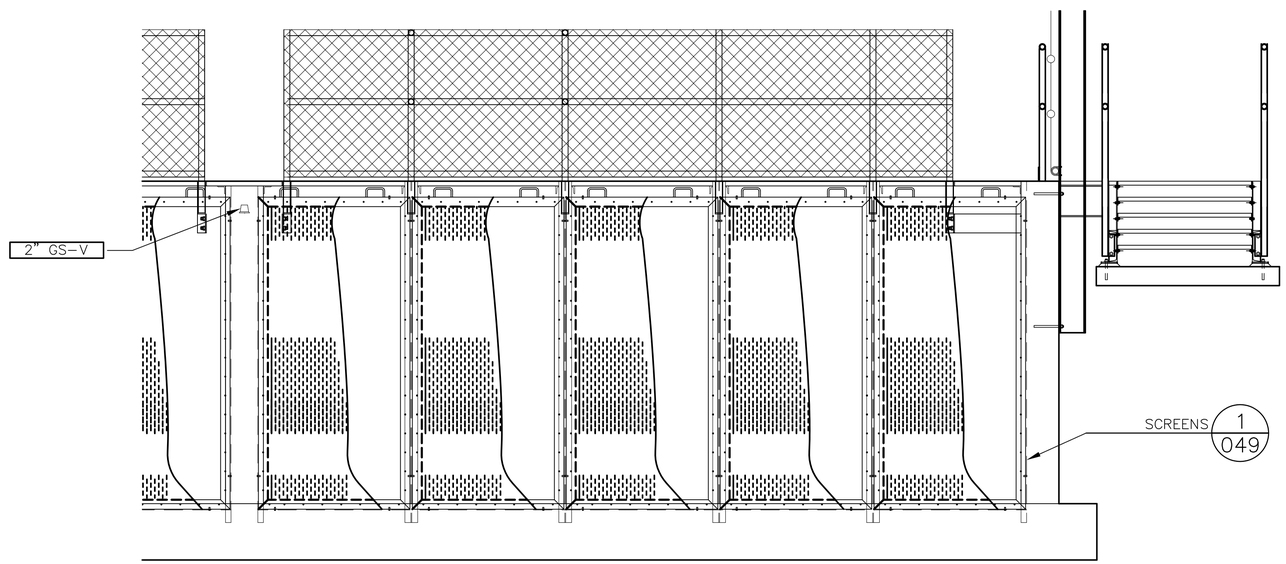

SECTION D/039

0 6" 1' 2' 4'
SCALE: 1/2" = 1'-0"

0 1"
BAR MEASURES ONE INCH ON ORIGINAL DRAWINGS

NOT TO BE USED FOR CONSTRUCTION

90% DESIGN SUBMITTAL

Resource Consultants, Inc.
REDMOND, WA.

SAP#	
PL#	
DATE 1-16-09	
ENG AJD/R2	DES AJD/R2
DR AJD/R2	CH
APPROVAL	

LRH IMPLEMENTATION
POND 13-14 MODIFICATIONS
POND 14 - DRAIN CHANNEL
SECTIONS - II

PACIFICORP ENERGY
A PACIFICORP COMPANY
HYDRO

SCALE: 1/2"=1'-0" | SHEET 041 | 116100 | REV.

No.	DATE	REVISION	BY	CHK	APP

DRAWING No.	REFERENCE DRAWINGS

PLOTTED: 4/15/2009 2:37:02 PM
SAVED:
CYONET ID:
D161578
PLOT SCALE: 1 =

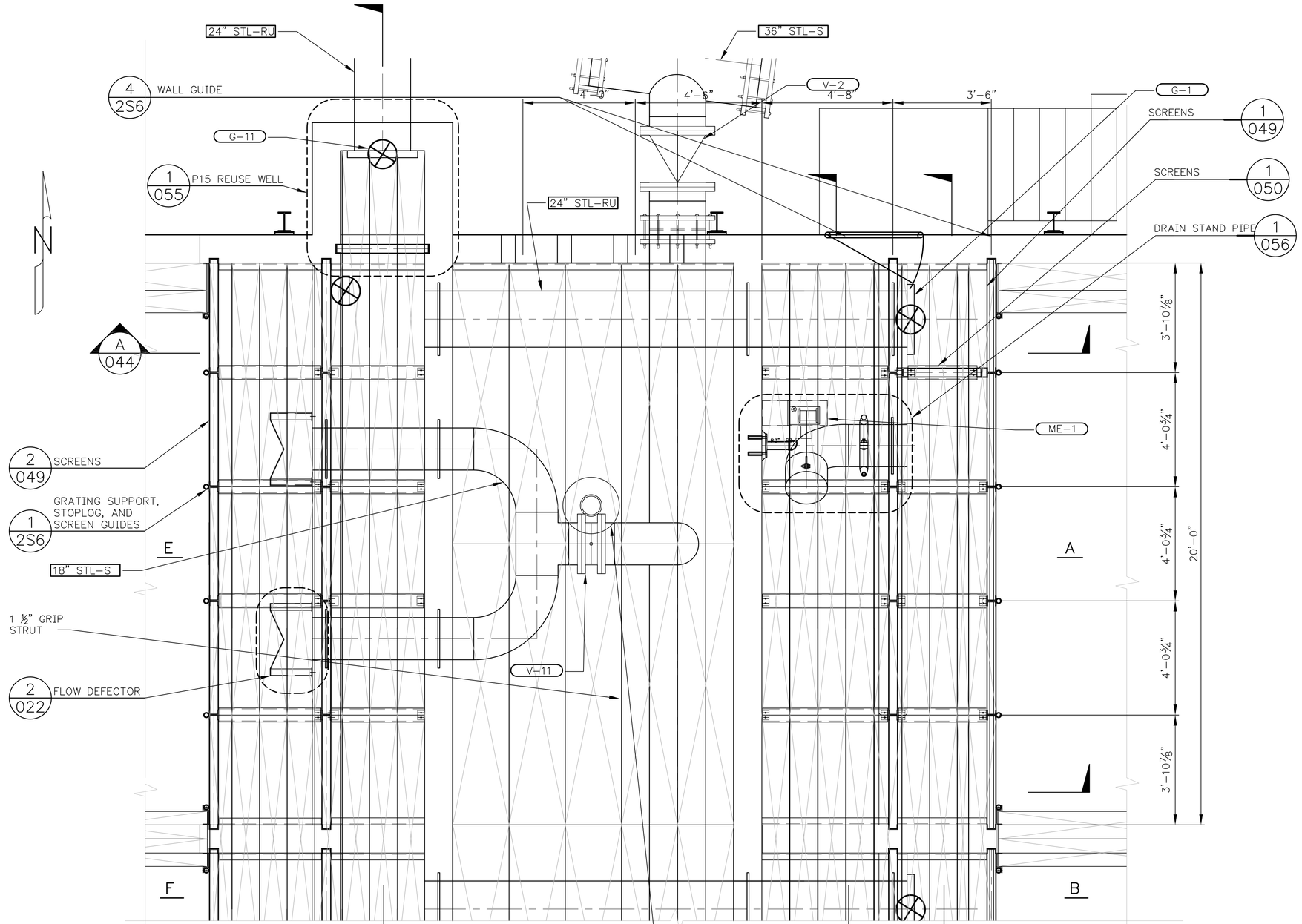

DECK PLAN

P14 INLET CHANNEL & P13 DRAIN CHANNEL 2 / 030 2 / 031

0 6" 1' 2' 4'
SCALE: 1/2" = 1'-0"

0 1"
BAR MEASURES ONE INCH ON ORIGINAL DRAWINGS

NOT TO BE USED FOR CONSTRUCTION

90% DESIGN SUBMITTAL

Resource Consultants, Inc.
REDMOND, WA.

SAP#	
PL#	
DATE 1-16-09	
ENG AJD/R2	DES AJD/R2
DR AJD/R2	CH
APPROVAL	

LRH IMPLEMENTATION
POND 13-14 MODIFICATIONS
P14 – REUSE CHANNEL & P13
DRAIN CHANNEL DECK PLAN

PACIFICORP ENERGY
A PACIFICORP COMPANY
HYDRO

SCALE: 1/2"=1'-0" | SHEET 042 | 116100 | REV.

No.	DATE	REVISION	BY	CHK	APP	No.	DATE	REVISION	BY	CHK	APP	DRAWING No.	REFERENCE DRAWINGS	DRAWING No.	REFERENCE DRAWINGS

PLOT SCALE: 1 =

PLOTTED: 4/15/2009 2:37:12 PM
SAVED:
CYDNET ID:

D161578

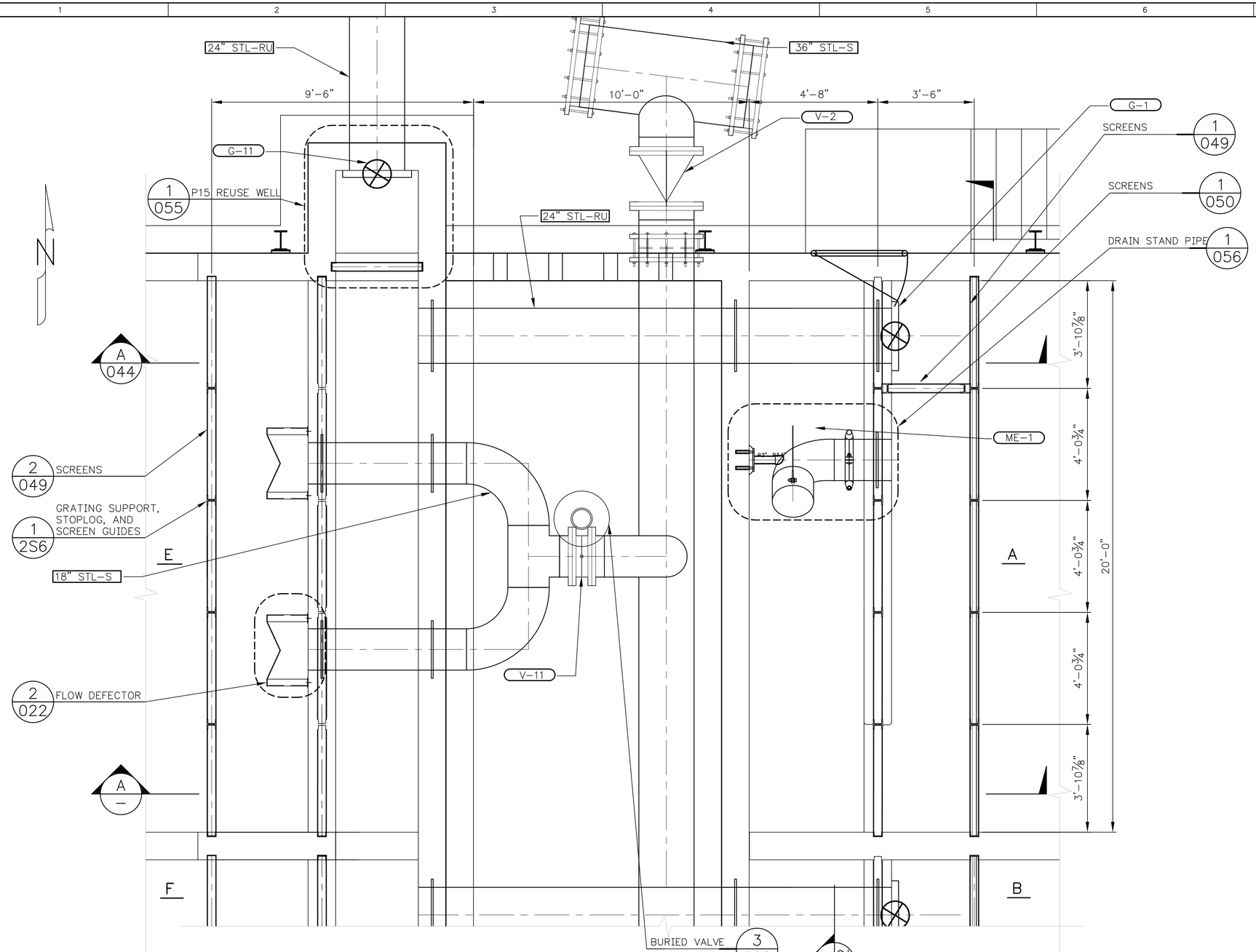

FLOOR PLAN

DRAIN CHANNEL P13 2/030 2/031

0 6" 1' 2' 4'
SCALE: 1/2" = 1'-0"

0 1"
BAR MEASURES ONE INCH ON ORIGINAL DRAWINGS

NOT TO BE USED FOR CONSTRUCTION

90% DESIGN SUBMITTAL

Resource Consultants, Inc.
REDMOND, WA.

SAP#	
PL#	
DATE 1-16-09	
ENG AJD/R2	DES AJD/R2
DR AJD/R2	CH
APPROVAL	

LRH IMPLEMENTATION
POND 13-14 MODIFICATIONS
P14 – REUSE CHANNEL & P13
DRAIN CHANNEL FLOOR PLAN

PACIFICORP ENERGY
A PACIFICORP COMPANY
HYDRO

SCALE: 1/2"=1'-0" | SHEET 043 | 116100 | REV.

No.	DATE	REVISION	BY	CHK	APP	No.	DATE	REVISION	BY	CHK	APP	DRAWING No.	REFERENCE DRAWINGS	DRAWING No.	REFERENCE DRAWINGS

PLOT SCALE: 1 =

PLOTTED: 4/15/2009 2:37:17 PM
SAVED:
CTONET ID:
D161578

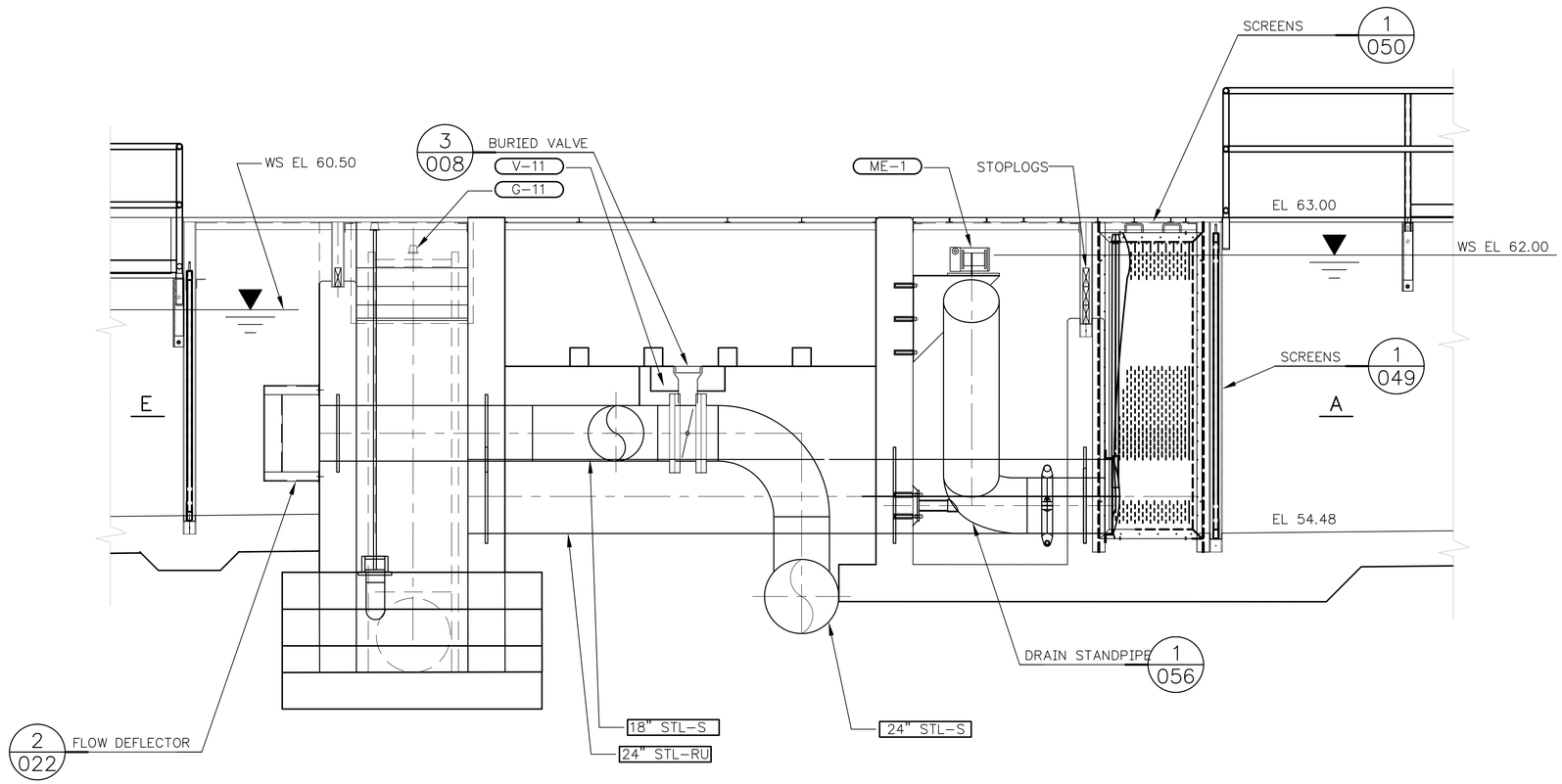

SECTION A 042 A 043

0 6" 1' 2' 4'
SCALE: 1/2" = 1'-0"

0 1"
BAR MEASURES ONE INCH
ON ORIGINAL DRAWINGS

NOT TO BE USED
FOR CONSTRUCTION

90% DESIGN SUBMITTAL

Resource Consultants, Inc.
REDMOND, WA.

SAP#	
PL#	
DATE 1-16-09	
ENG AJD/R2	DES AJD/R2
DR AJD/R2	CH
APPROVAL	

LRH IMPLEMENTATION
POND 13-14 MODIFICATIONS
P14 - REUSE CHANNEL & P13
DRAIN CHANNEL SECS - I

PACIFICORP ENERGY
A PACIFICORP COMPANY

HYDRO

SCALE: 1/2"=1'-0" | SHEET 044 | 116100 | REV.

No.	DATE	REVISION	BY	CHK	APP	No.	DATE	REVISION	BY	CHK	APP	DRAWING No.	REFERENCE DRAWINGS	DRAWING No.	REFERENCE DRAWINGS

PLOT SCALE: 1 =

PLOTTED: 4/15/2009 3:37:32 PM
SAVED:
CYONET ID:

D161578

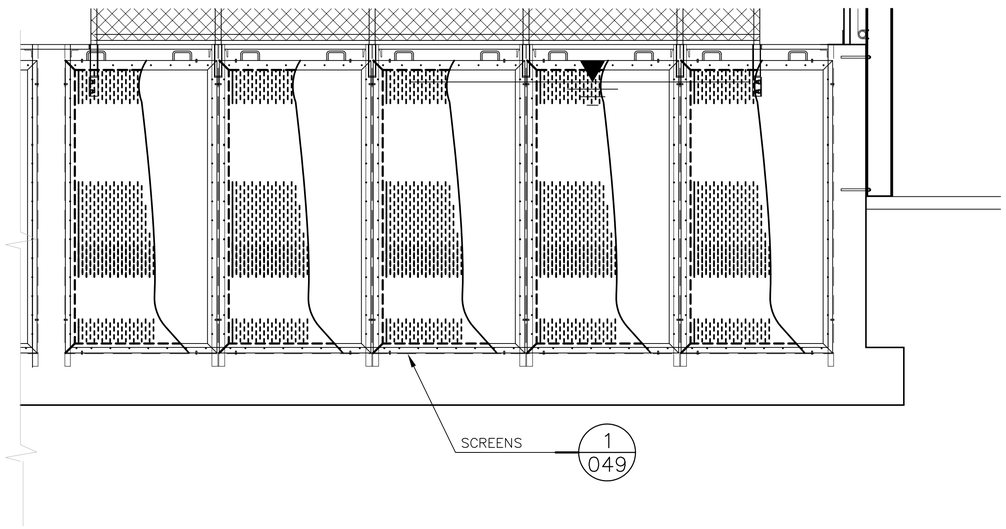

SECTION B 042 / B 043

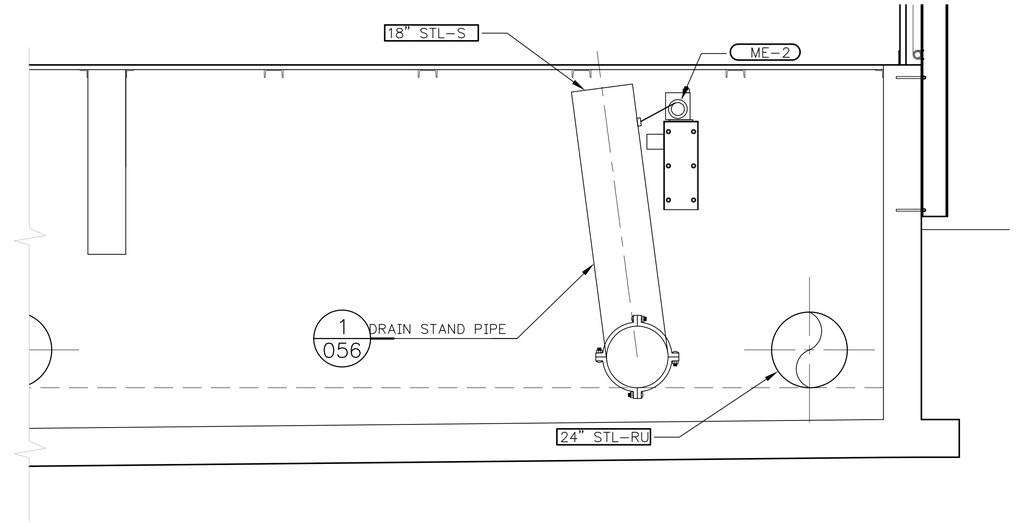

SECTION C 042 / C 043

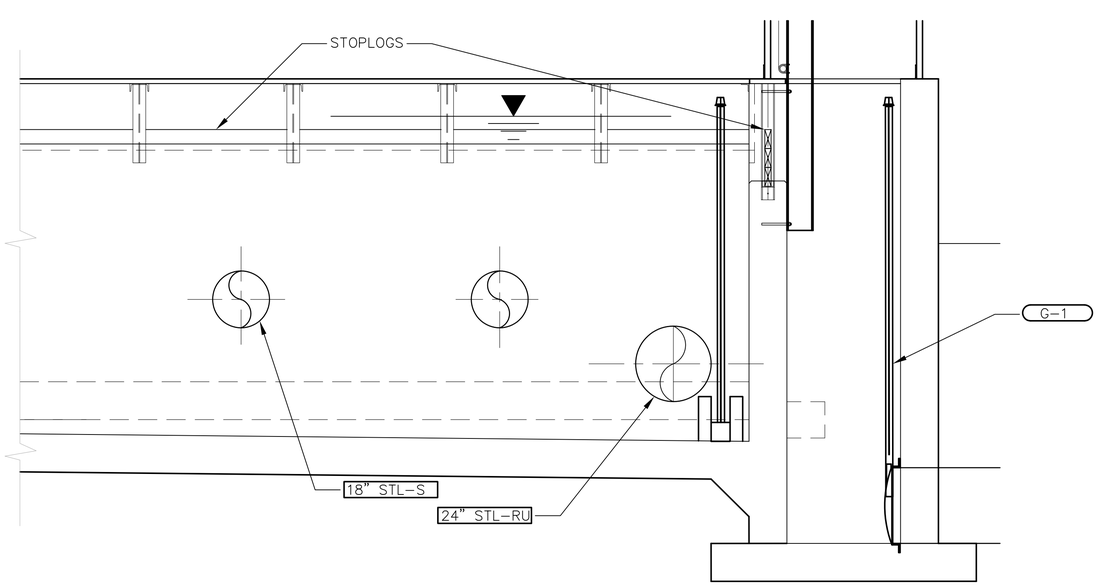

SECTION D 042 / D 043

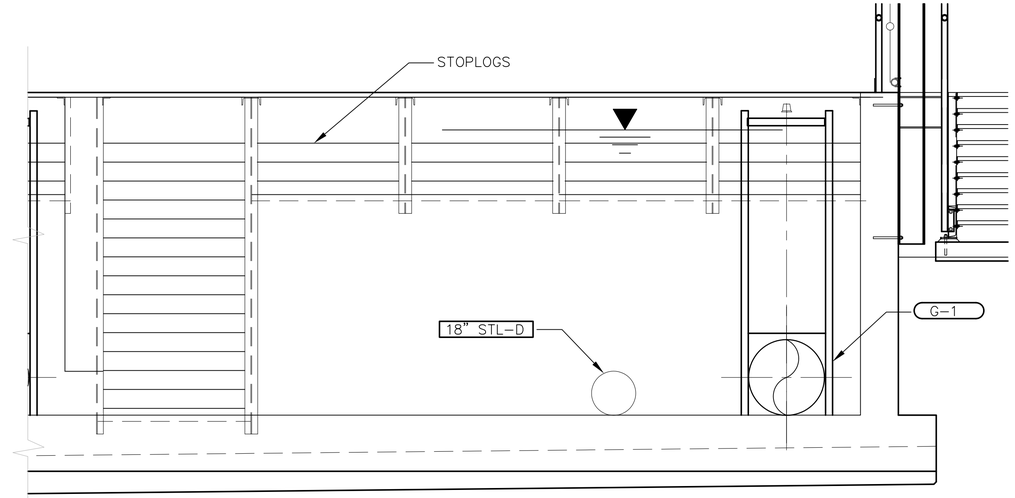

SECTION E 042 / E 043

NOT TO BE USED FOR CONSTRUCTION

90% DESIGN SUBMITTAL

0 6" 1' 2' 4'

SCALE: 1/2" = 1'-0"

0 1"

BAR MEASURES ONE INCH ON ORIGINAL DRAWINGS

Resource Consultants, Inc.
REDMOND, WA.

SAP#	
PL#	
DATE	1-16-09
ENG	AJD/R2 DES AJD/R2
DR	AJD/R2 CH
APPROVAL	

LRH IMPLEMENTATION
POND 13-14 MODIFICATIONS
P14 - REUSE CHANNEL & P13
DRAIN CHANNEL SECS - II

PACIFICORP ENERGY
A PACIFICORP COMPANY

HYDRO

SCALE: 1/2"=1'-0" SHEET 045 116100 REV.

No.	DATE	REVISION	BY	CHK	APP	No.	DATE	REVISION	BY	CHK	APP	DRAWING No.	REFERENCE DRAWINGS	DRAWING No.	REFERENCE DRAWINGS

PLOT SCALE: 1 =

PLOTTED: 4/15/2009 2:37:27 PM
SAVED:
CYONET ID:

D161578

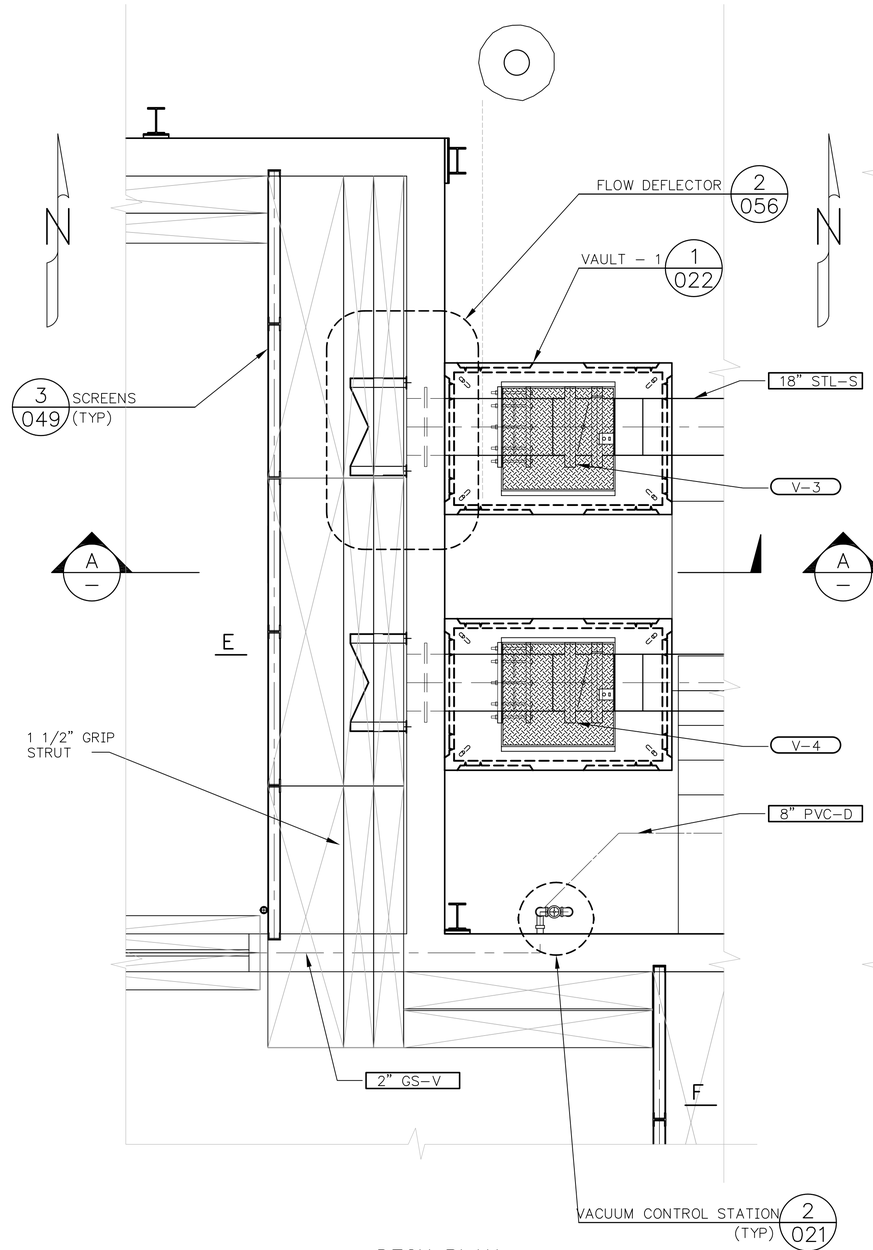

DECK PLAN

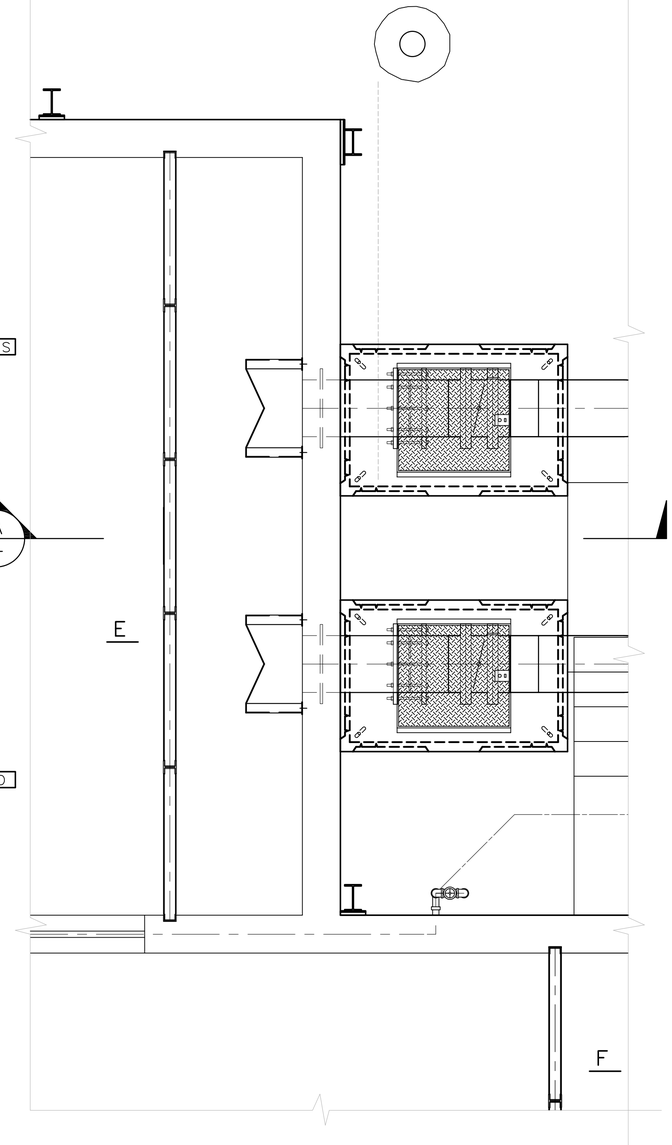

FLOOR PLAN

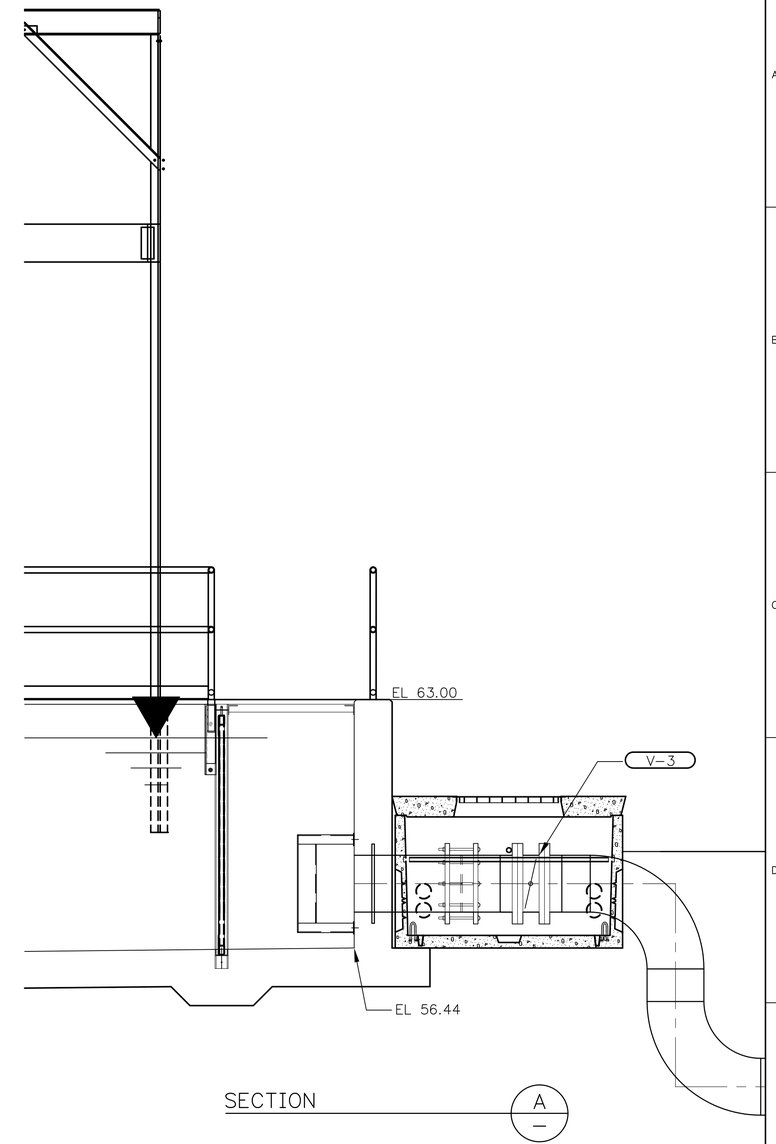

SECTION A/–

P13 INLET CHANNEL 3/031

SCALE: 1/2" = 1'–0"

BAR MEASURES ONE INCH ON ORIGINAL DRAWINGS

NOT TO BE USED FOR CONSTRUCTION

90% DESIGN SUBMITTAL

Resource Consultants, Inc.
REDMOND, WA.

SAP#	
PL#	
DATE	1–16–09
ENG AJD/R2	DES AJD/R2
DR AJD/R2	CH
APPROVAL	

LRH IMPLEMENTATION
POND 13–14 MODIFICATIONS
P13A – INLET CHANNEL
DECK PLAN & FLOOR PLAN

PACIFICORP ENERGY
A PACIFICORP COMPANY
HYDRO

SCALE: 1/2"=1'–0" | SHEET 046 | 116100 | REV.

No.	DATE	REVISION	BY	CHK	APP	DRAWING No.	REFERENCE DRAWINGS

PLOT SCALE: 1 =

PLOTTED: 4/15/2009 2:37:37 PM
SAVED:
CYONET ID:
D161578

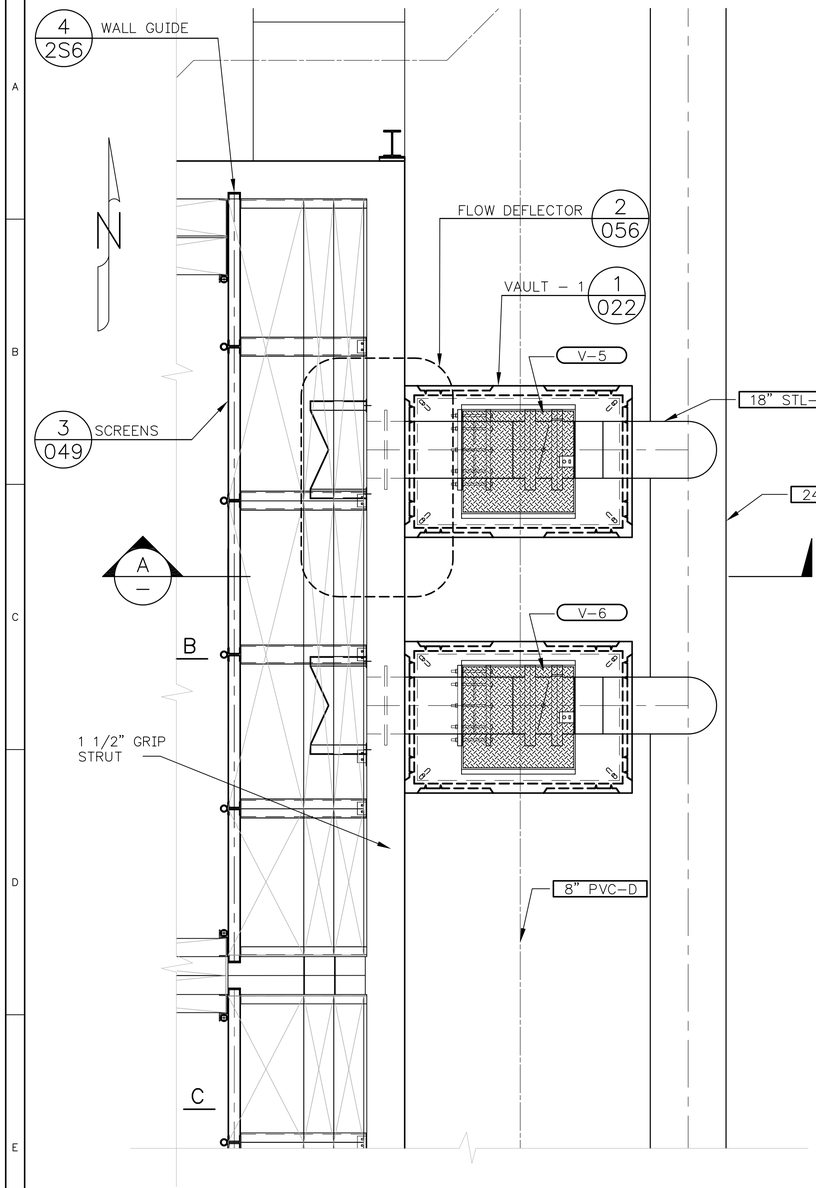

DECK PLAN

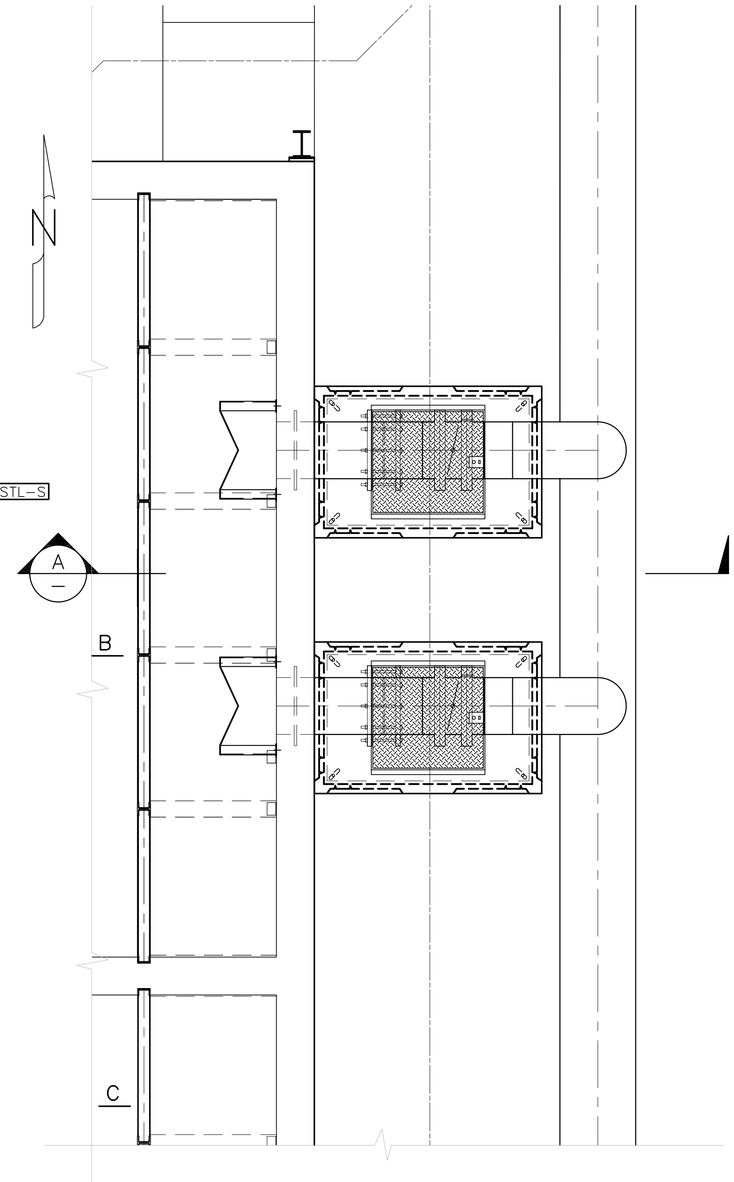

FLOOR PLAN

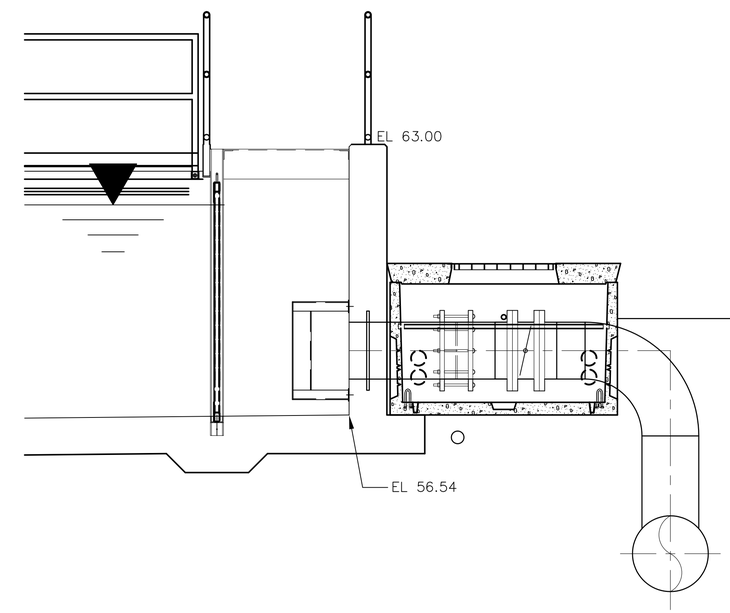

SECTION A

P14 DRAIN CHANNEL 4/031

0 6" 1' 2' 4'
SCALE: 1/2" = 1'–0"

0 1"
BAR MEASURES ONE INCH
ON ORIGINAL DRAWINGS

NOT TO BE USED FOR CONSTRUCTION

90% DESIGN SUBMITTAL

Resource Consultants, Inc.
REDMOND, WA.

SAP#	
PL#	
DATE 1–16–09	
ENG AJD/R2	DES AJD/R2
DR AJD/R2	CH
APPROVAL	

LRH IMPLEMENTATION
POND 13–14 MODIFICATIONS
P13B – INLET CHANNEL
DECK PLAN & FLOOR PLAN

PACIFICORP ENERGY
A PACIFICORP COMPANY
HYDRO

SCALE: 1/2"=1'–0" | SHEET 047 | 116100 | REV.

No.	DATE	REVISION	BY	CHK	APP	No.	DATE	REVISION	BY	CHK	APP	DRAWING No.	REFERENCE DRAWINGS	DRAWING No.	REFERENCE DRAWINGS

PLOT SCALE: 1 =

PLOTTED: 4/15/2009 2:37:47 PM
SAVED:
CTONET ID:
D161578

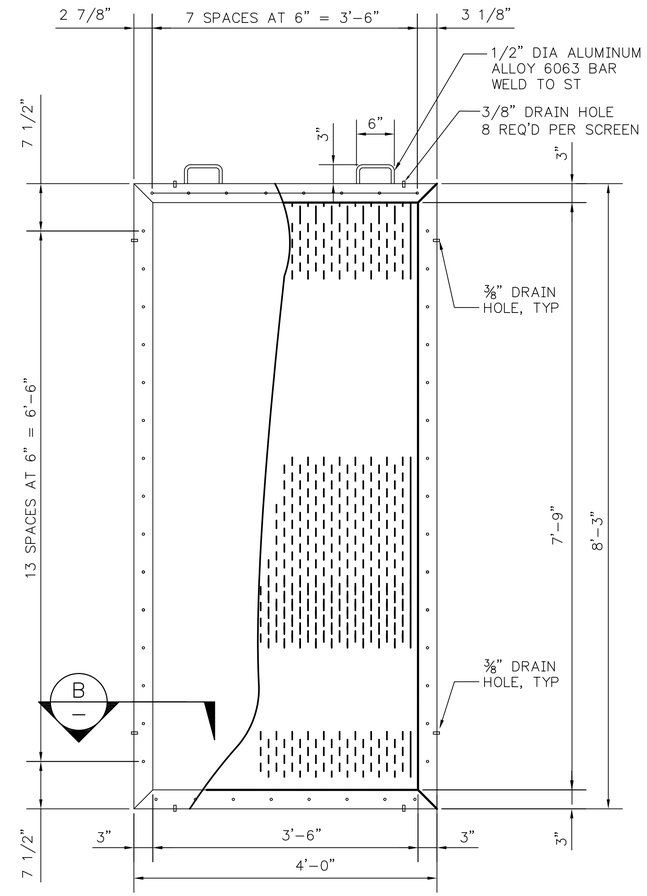

P13 & P14 DRAIN SCREEN SECTION (1)
(40 REQUIRED)

0 6" 1' 2'
SCALE: 1" = 1'-0"

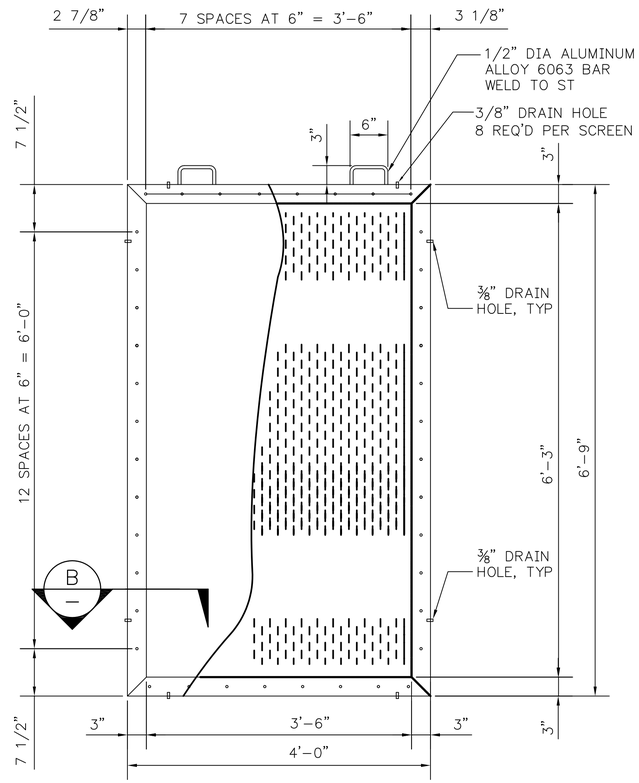

P14 ENTRANCE SCREEN SECTION (2)
(20 REQUIRED)

0 6" 1' 2'
SCALE: 1" = 1'-0"

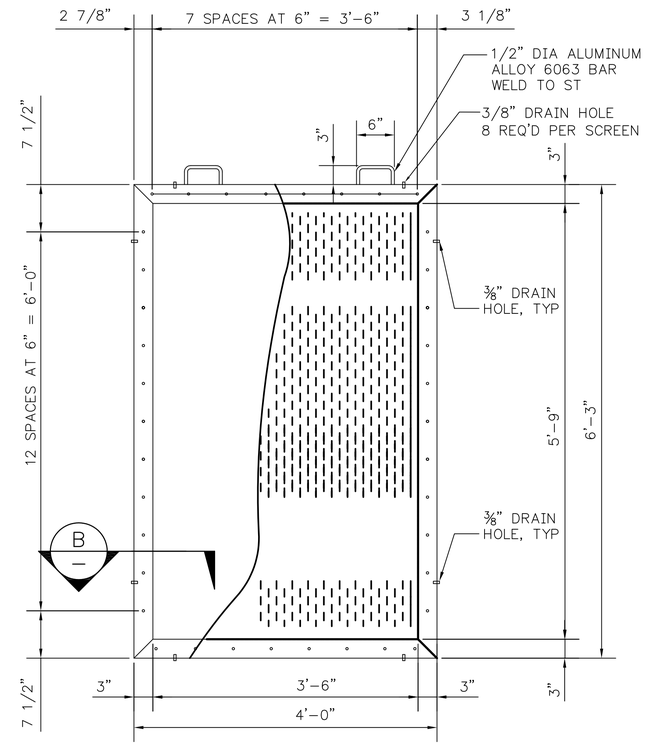

P13 ENTRANCE SCREEN SECTION (3)
(20 REQUIRED)

0 6" 1' 2'
SCALE: 1" = 1'-0"

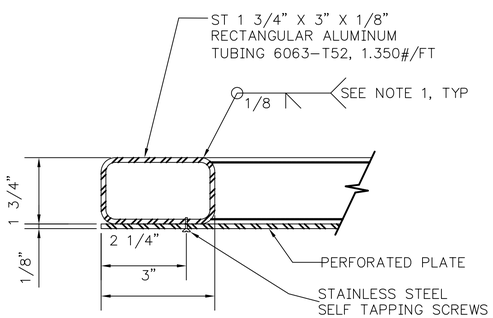

SECTION (B)

0 3" 6"
SCALE: 6" = 1'-0"

NOTES:

1. FRAME SHALL BE ST 1 3/4" X 3" X 1/8" ALUM. ALLOY 6063-T52. MITER AND WELD ALL CORNERS. GRIND WELDS ON 3" FACES FLUSH.
2. PERFORATED PLATE SHALL BE 1/8" ALUM. ALLOY 5052. PLATE SHALL BE SLOTTED WITH 3/32" X 1/2" OR 3/16" X 1" SIDE STAGGER SLOTS. SIDE AND END BARS SHALL BE 1/8". PROVIDE 3" BLANK EDGE ON ALL SIDES. MINIMUM OPEN AREA SHALL BE 40%.
3. ATTACH PERFORATED PLATE TO TUBING WITH STAINLESS STEEL SELF TAPPING SCREWS. MOUNT SHARP SIDE OF PERFORATIONS TOWARD FRAME.

0 1"
BAR MEASURES ONE INCH ON ORIGINAL DRAWINGS

NOT TO BE USED FOR CONSTRUCTION

90% DESIGN SUBMITTAL

Resource Consultants, Inc.
REDMOND, WA.

SAP#	
PL#	
DATE 1-16-09	
ENG AJD/R2	DES AJD/R2
DR AJD/R2	CH
APPROVAL	

LRH IMPLEMENTATION
POND 13-14 MODIFICATIONS
SCREENS - I

PACIFICORP ENERGY
A PACIFICORP COMPANY
HYDRO

SCALE: AS SHOWN | SHEET 049 | 116100 | REV.

No.	DATE	REVISION	BY	CHK	APP	No.	DATE	REVISION	BY	CHK	APP	DRAWING No.	REFERENCE DRAWINGS	DRAWING No.	REFERENCE DRAWINGS

PLOT SCALE: 1 =

PLOTTED: 4/15/2009 2:37:55 PM
SAVED:
CYDNET ID:
D161578

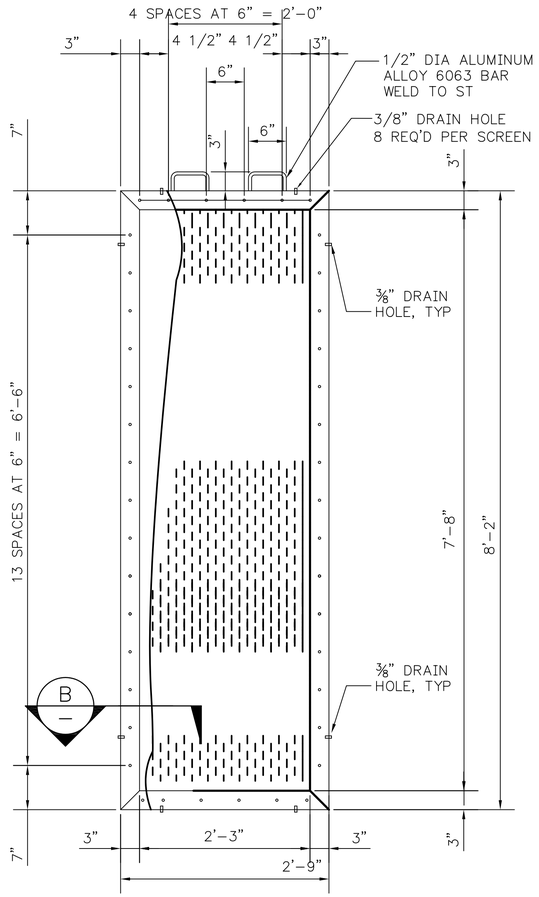

P13 & P14 REUSE SCREEN

(8 REQUIRED)

1
—

0 6" 1' 2'

SCALE: 1" = 1'-0"

NOT TO BE USED FOR CONSTRUCTION

90% DESIGN SUBMITTAL

0 1"

BAR MEASURES ONE INCH ON ORIGINAL DRAWINGS

Resource Consultants, Inc.
REDMOND, WA.

SAP#	
PL#	
DATE	1-16-09
ENG	AJD/R2
DES	AJD/R2
DR	AJD/R2
CH	
APPROVAL	

LRH IMPLEMENTATION
POND 13-14 MODIFICATIONS
SCREENS - II

PACIFICORP ENERGY
A PACIFICORP COMPANY

HYDRO

SCALE: AS SHOWN | SHEET 050 | 116100 | REV.

No.	DATE	REVISION	BY	CHK	APP

No.	DATE	REVISION	BY	CHK	APP

DRAWING No.	REFERENCE DRAWINGS
DRAWING No.	REFERENCE DRAWINGS

PLOT SCALE: 1 =

PLOTTED: 4/15/2009 2:37:59 PM
SAVED:
CYONET ID:

D161578

BORDER REVISED 10/31/06 D.M.J.

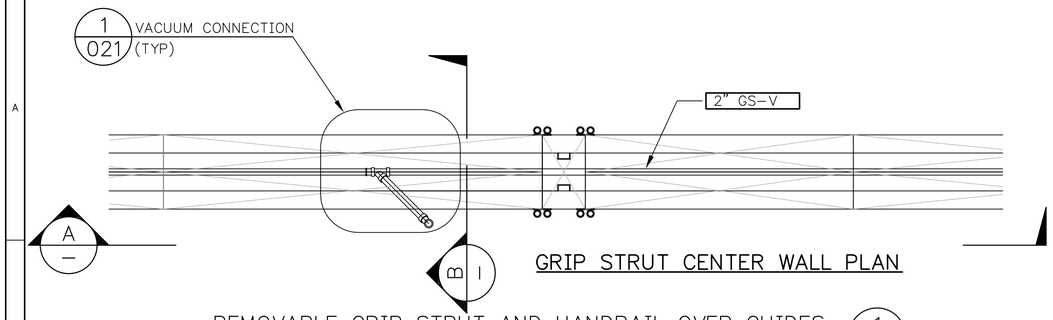

GRIP STRUT CENTER WALL PLAN

REMOVABLE GRIP STRUT AND HANDRAIL OVER GUIDES 1/030

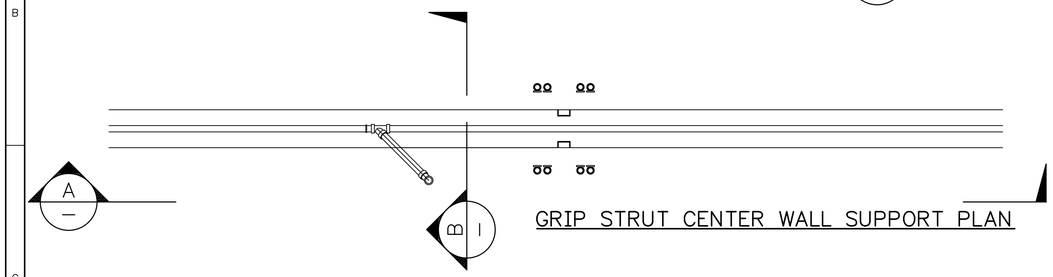

GRIP STRUT CENTER WALL SUPPORT PLAN

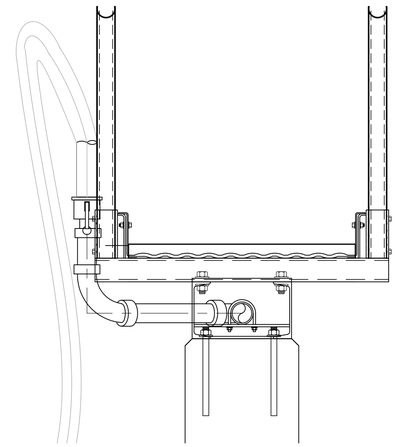

DETAIL 2/—

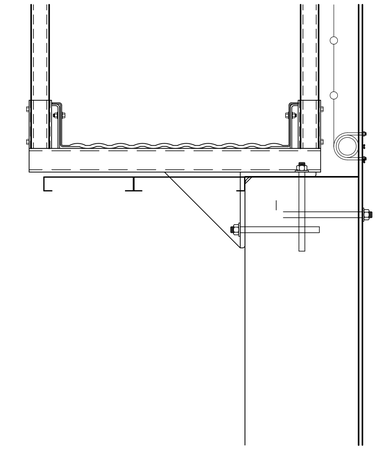

DETAIL 3/—

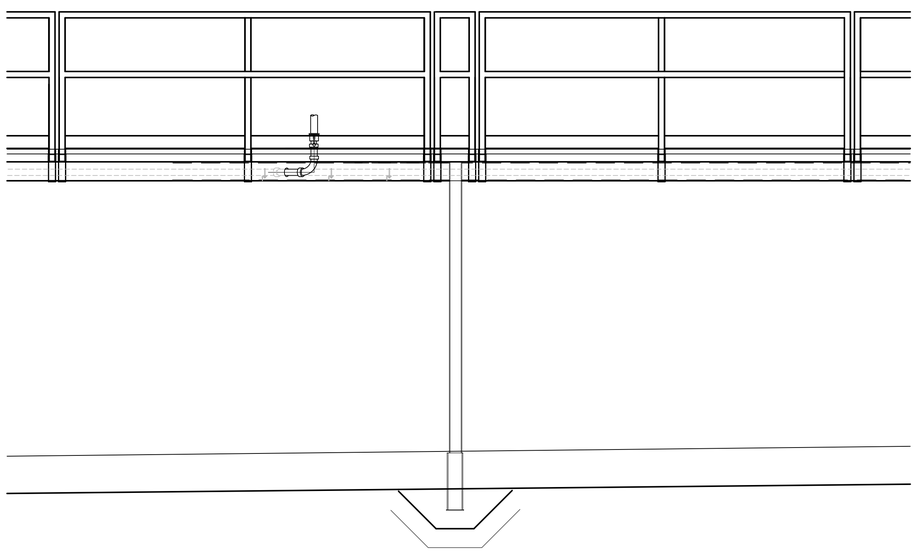

SECTION A/—

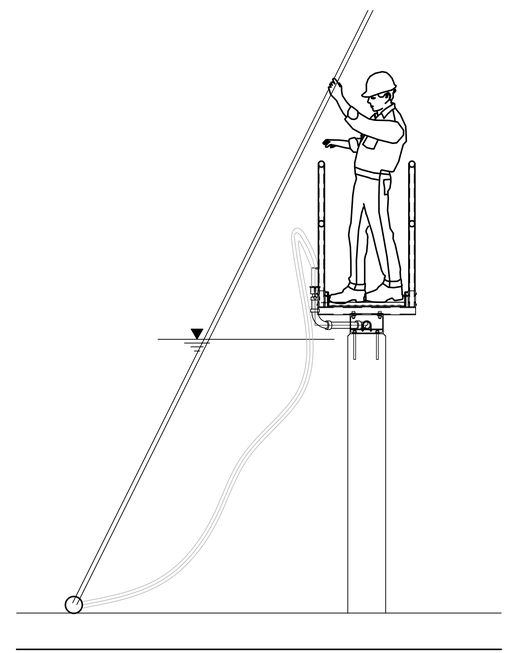

SECTION B/—

NOT TO BE USED FOR CONSTRUCTION

90% DESIGN SUBMITTAL

0 6" 1' 2' 4'

SCALE: 1/2" = 1'-0"

0 1"

BAR MEASURES ONE INCH ON ORIGINAL DRAWINGS

Resource Consultants, Inc.
REDMOND, WA.

SAP#	
PL#	
DATE	1-16-09
ENG AJD/R2	DES AJD/R2
DR AJD/R2	CH
APPROVAL	

LRH IMPLEMENTATION
POND 13-14 MODIFICATIONS
REMOVABLE GRIP STRUT
OVER GUIDES

PACIFICORP ENERGY
A PACIFICORP COMPANY

HYDRO

SCALE: AS SHOWN | SHEET 051 | 116100 | REV.

No.	DATE	REVISION	BY	CHK	APP	No.	DATE	REVISION	BY	CHK	APP	DRAWING No.	REFERENCE DRAWINGS	DRAWING No.	REFERENCE DRAWINGS

PLOT SCALE: 1 =

PLOTTED: 4/15/2009 2:38:13 PM
SAVED:
CYONET ID:

D161578

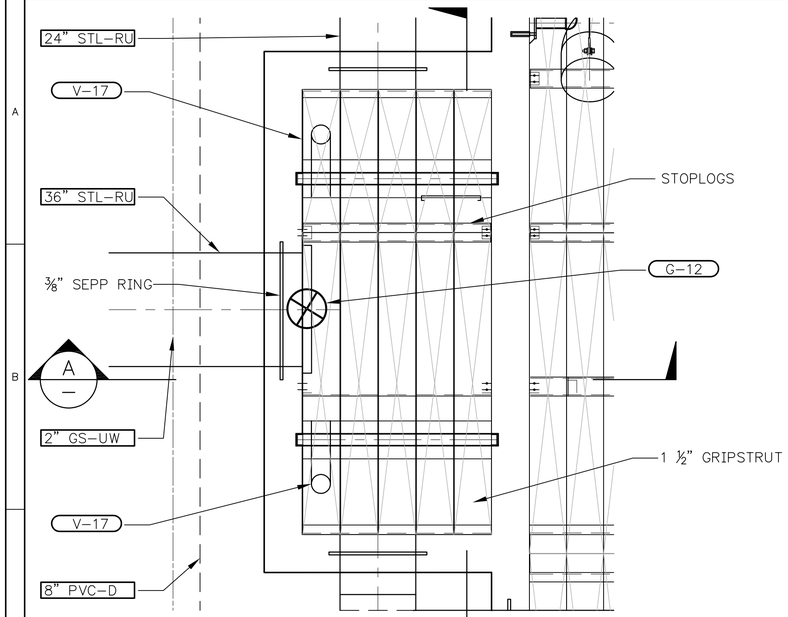

DECK PLAN

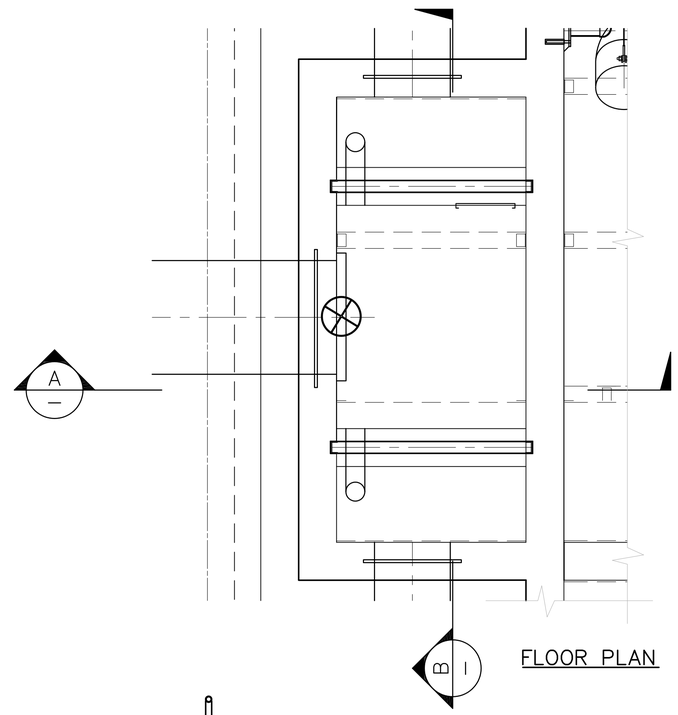

FLOOR PLAN

REUSE WELL 1/030

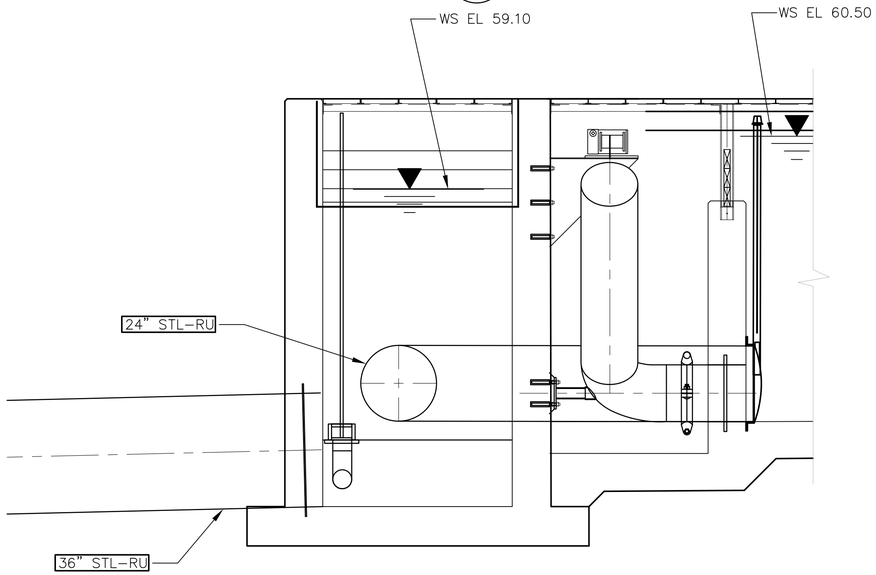

SECTION A

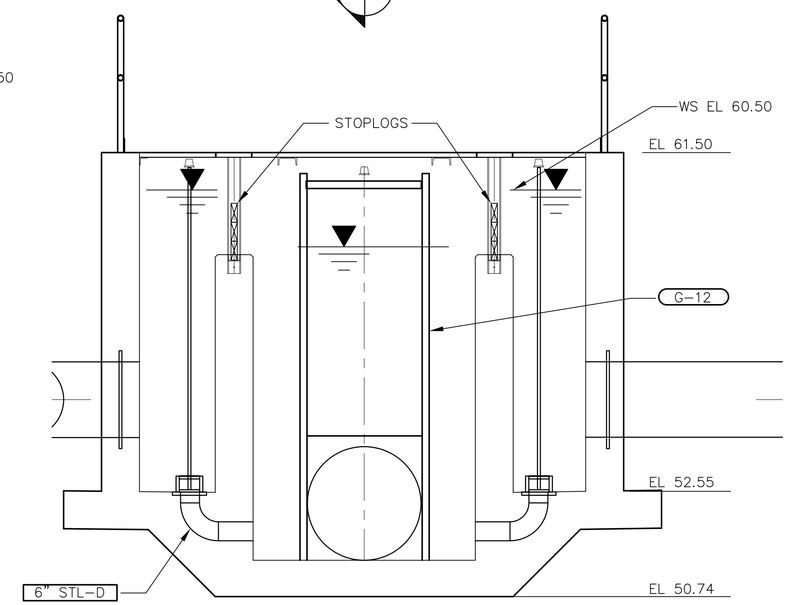

SECTION B

NOT TO BE USED FOR CONSTRUCTION

90% DESIGN SUBMITTAL

0 6" 1' 2' 4'
SCALE: 1/2" = 1'-0"

0 1"
BAR MEASURES ONE INCH ON ORIGINAL DRAWINGS

Resource Consultants, Inc.
REDMOND, WA.

SAP#	
PL#	
DATE 1-16-09	
ENG AJD/R2 DES AJD/R2	
DR AJD/R2 CH	
APPROVAL	

LRH IMPLEMENTATION
POND 13-14 MODIFICATIONS
P14 REUSE WELL
PLAN AND SECTIONS

PACIFICORP ENERGY
A PACIFICORP COMPANY
HYDRO

SCALE: 1/2"=1'-0" | SHEET 052 | 116100 | REV.

No.	DATE	REVISION	BY	CHK	APP	REVISION	DATE	No.	BY	CHK	APP	REFERENCE DRAWINGS	DRAWING No.	REFERENCE DRAWINGS	DRAWING No.

PLOT SCALE: 1 =

PLOTTED: 4/15/2009 3:38:44 PM
SAVED:
CVONET ID:

D161578

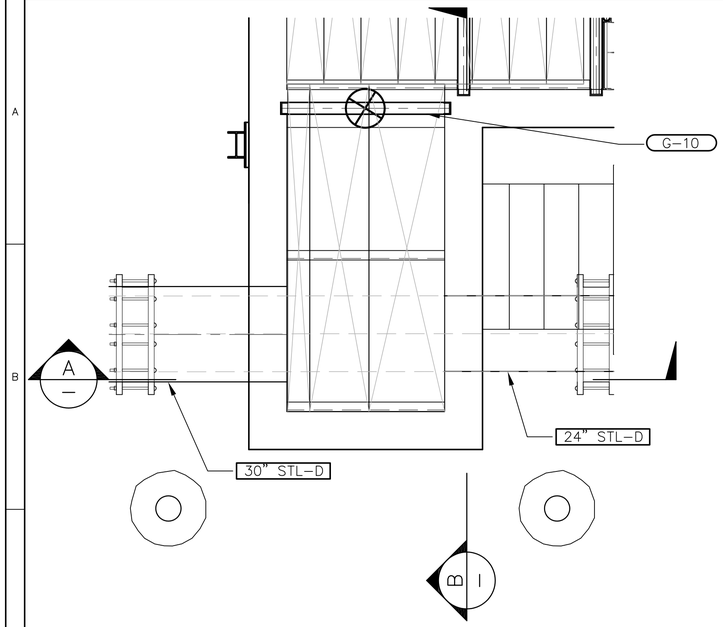

DECK PLAN

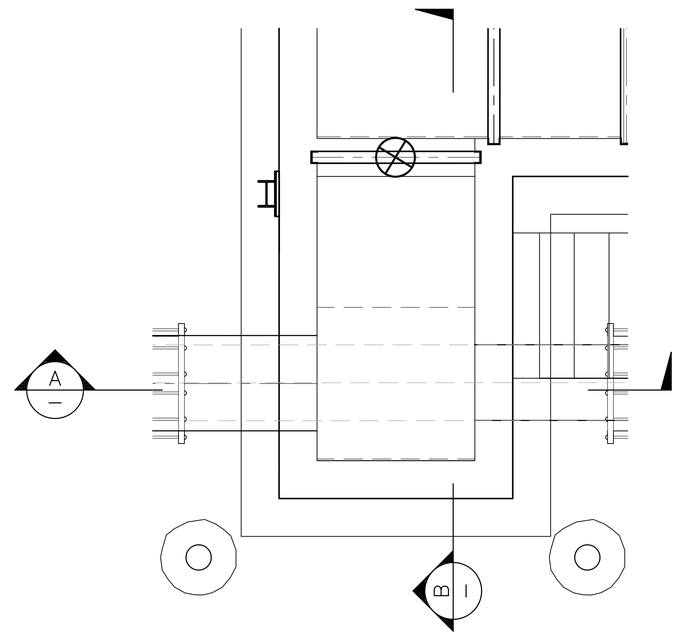

FLOOR PLAN

P14 DRAIN WELL 1/030

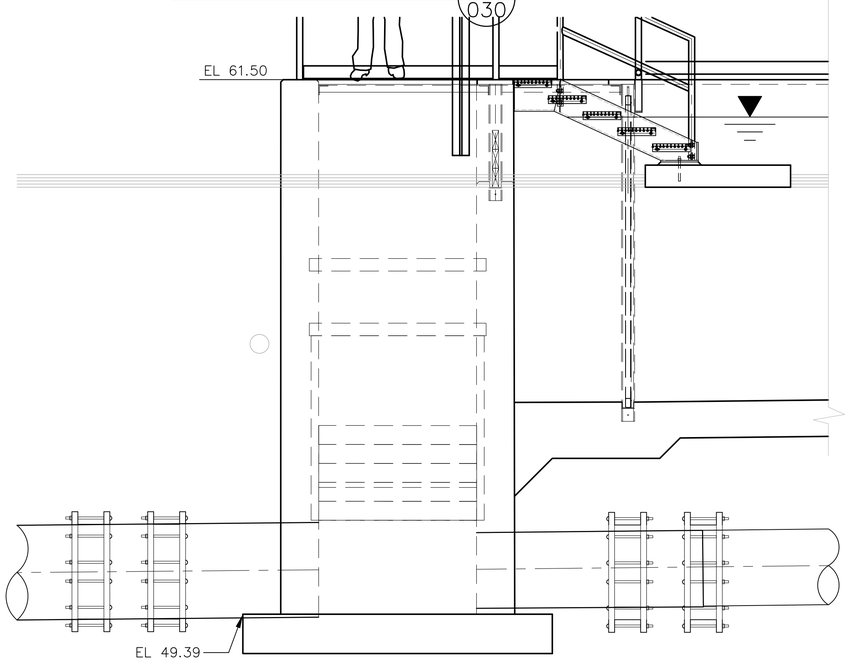

SECTION A

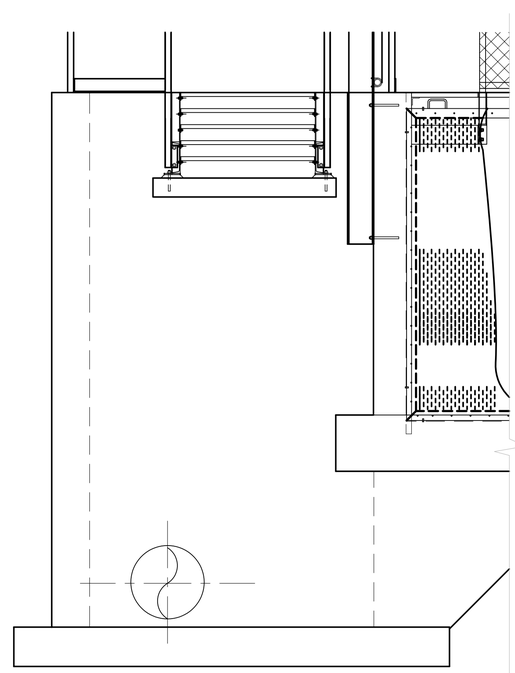

SECTION B

0 6" 1' 2' 4'
SCALE: 1/2" = 1'-0"

0 1"
BAR MEASURES ONE INCH ON ORIGINAL DRAWINGS

90% DESIGN SUBMITTAL

NOT TO BE USED FOR CONSTRUCTION

Resource Consultants, Inc.
REDMOND, WA.

SAP#		
PL#		
DATE 1-16-09		
ENG AJD/R2	DES AJD/R2	
DR AJD/R2	CH	
APPROVAL		

LRH IMPLEMENTATION
POND 13-14 MODIFICATIONS
P14 DRAIN WELL
PLAN AND SECTIONS

PACIFICORP ENERGY
A PACIFICORP COMPANY
HYDRO

SCALE: AS SHOWN | SHEET 053 | 116100 | REV.

PLOTTED: 4/15/2009 2:39:12 PM
SAVED:
CYDNET ID:
D161578

PLOT SCALE: 1 =

No.	DATE	REVISION	BY	CHK	APP	No.	DATE	REVISION	BY	CHK	APP	DRAWING No.	REFERENCE DRAWINGS	DRAWING No.	REFERENCE DRAWINGS

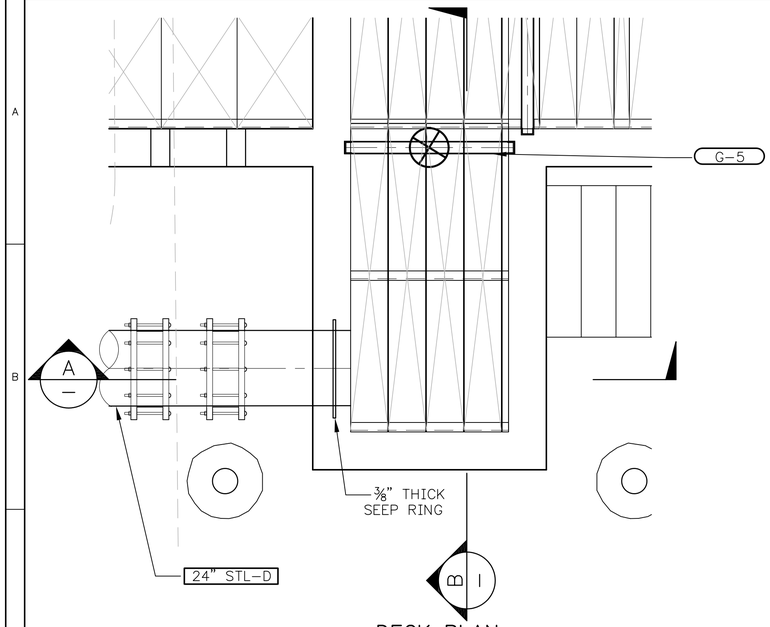

DECK PLAN

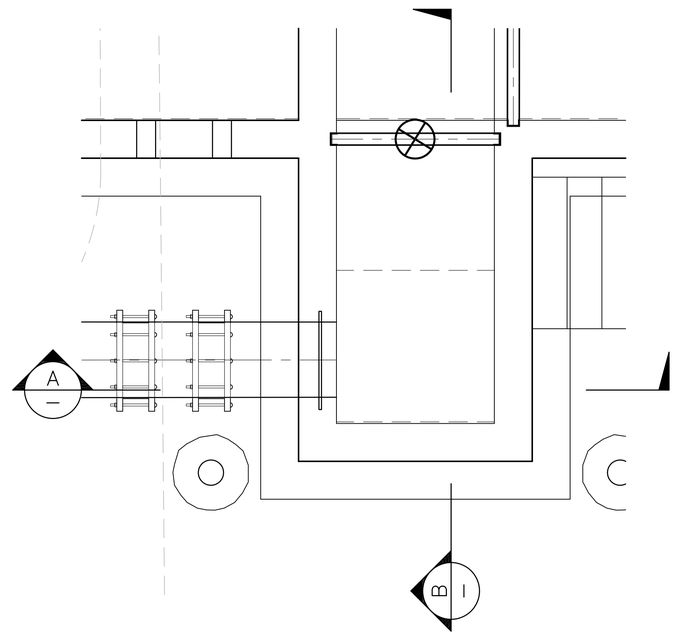

FLOOR PLAN

P13 DRAIN WELL

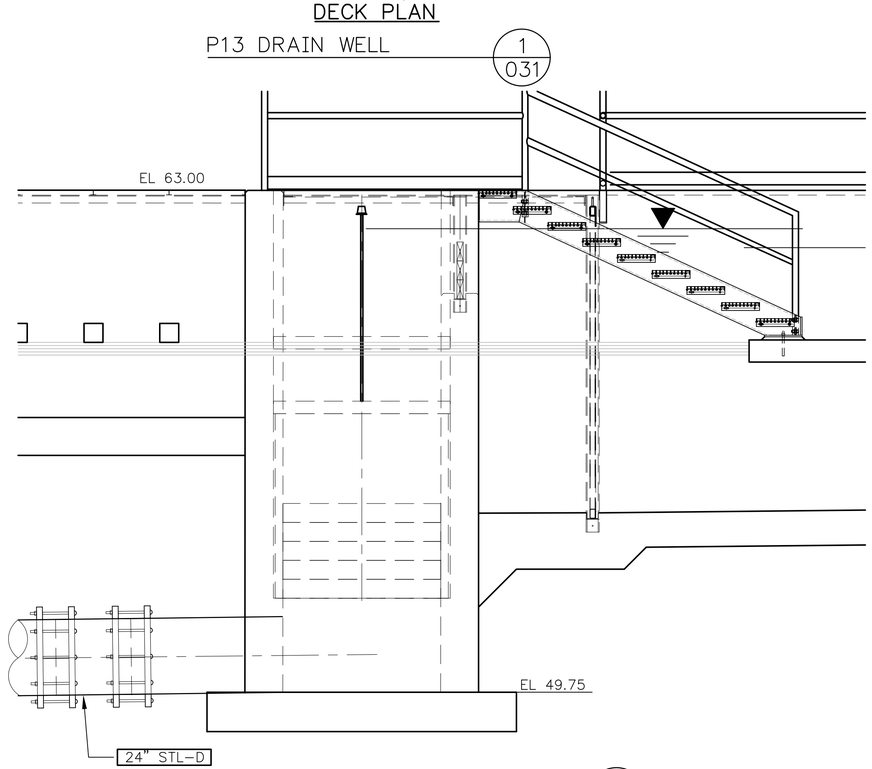

SECTION A —

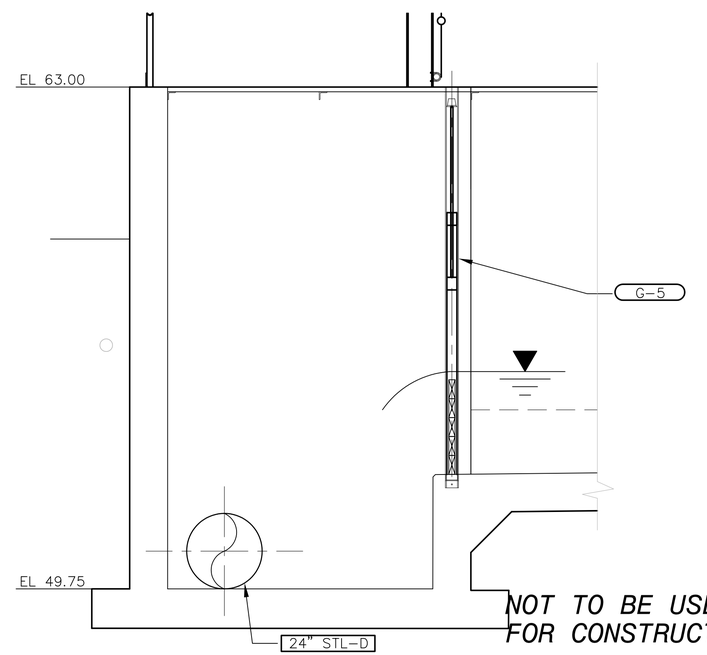

SECTION B —

NOT TO BE USED
FOR CONSTRUCTION

90% DESIGN SUBMITTAL

0 6" 1' 2' 4'
SCALE: 1/2" = 1'-0"

0 1"
BAR MEASURES ONE INCH
ON ORIGINAL DRAWINGS

Resource Consultants, Inc.
REDMOND, WA.

SAP#	
PL#	
DATE	1-16-09
ENG	AJD/R2 DES AJD/R2
DR	AJD/R2 CH
APPROVAL	

LRH IMPLEMENTATION
POND 13-14 MODIFICATIONS
P13 DRAIN WELL
PLAN AND SECTIONS

PACIFICORP ENERGY
A PACIFICORP COMPANY
HYDRO

SCALE: AS SHOWN | SHEET 054 | 116100 | REV.

No.	DATE	REVISION	BY	CHK	APP	No.	DATE	REVISION	BY	CHK	APP	DRAWING No.	REFERENCE DRAWINGS	DRAWING No.	REFERENCE DRAWINGS

PLOT SCALE: 1 =

PLOTTED: 4/15/2009 2:39:38 PM
SAVED:
CVONET ID:

D161578

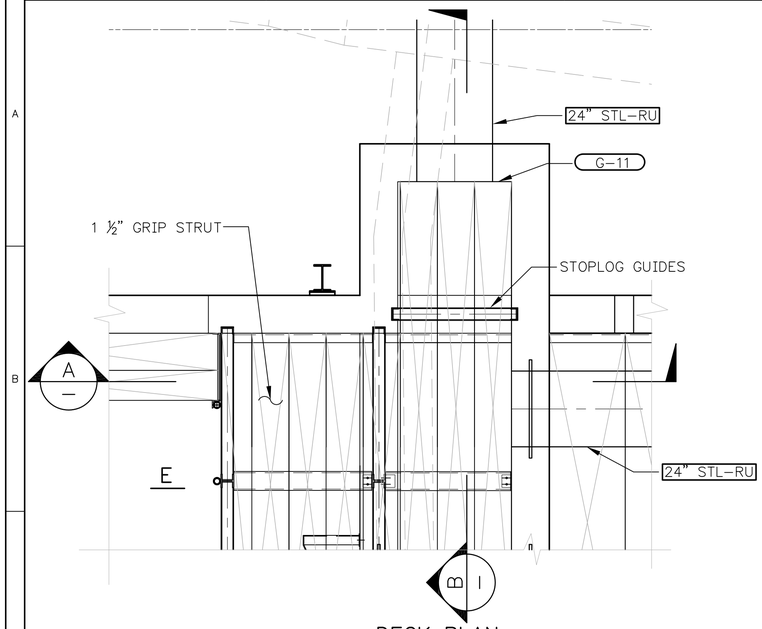

DECK PLAN

P15 REUSE WELL 1/030

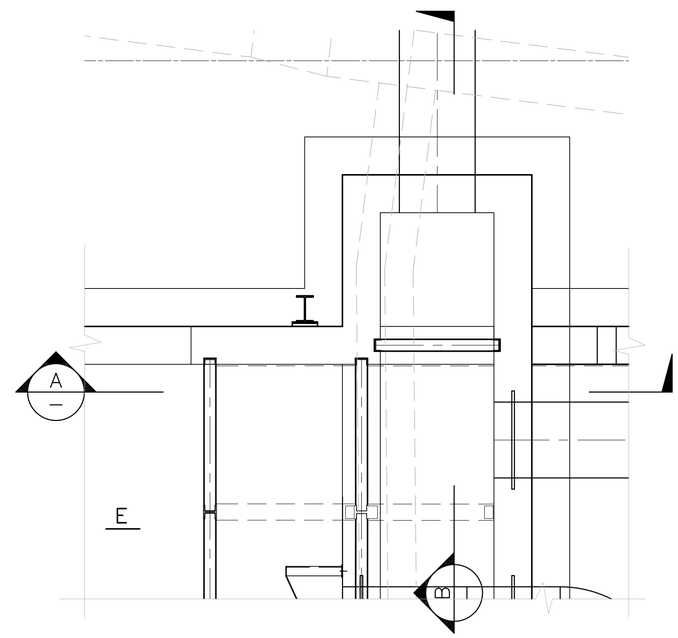

FLOOR PLAN

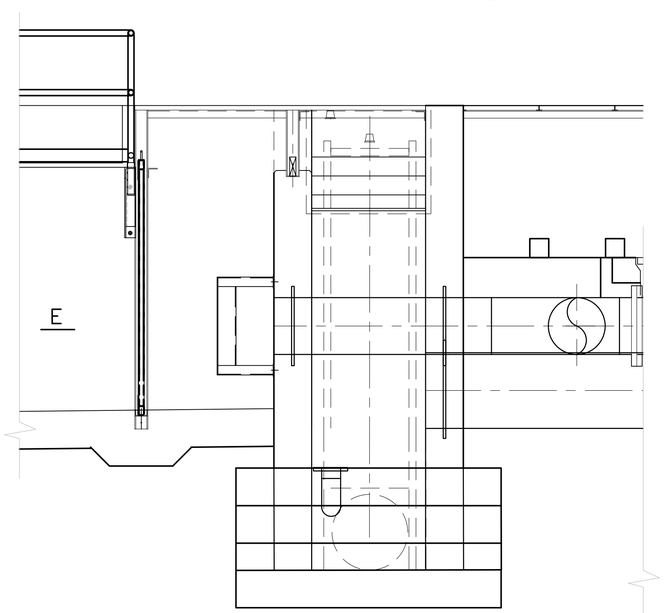

SECTION A/–

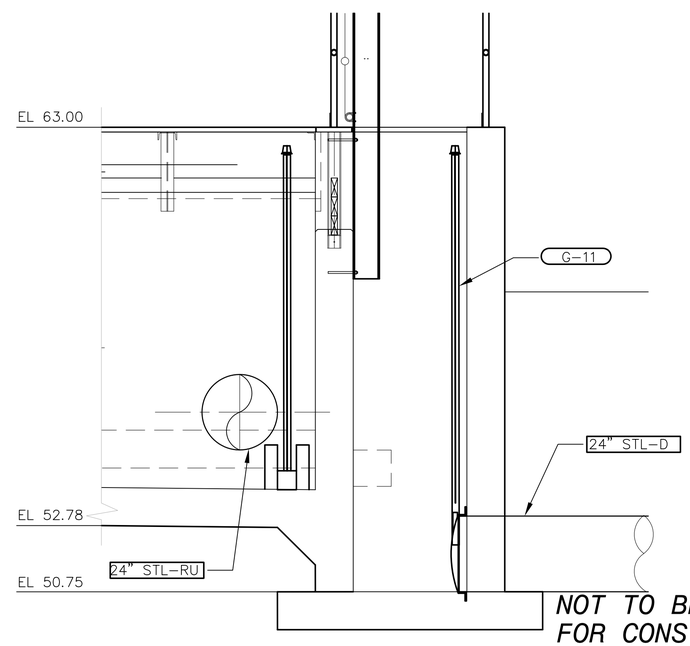

NOT TO BE USED FOR CONSTRUCTION

90% DESIGN SUBMITTAL

SECTION B/–

0 6" 1' 2' 4'

SCALE: 1/2" = 1'-0"

0 1"

BAR MEASURES ONE INCH ON ORIGINAL DRAWINGS

Resource Consultants, Inc.
REDMOND, WA.

SAP#	
PL#	
DATE	1-16-09
ENG	AJD/R2 DES AJD/R2
DR	AJD/R2 CH
APPROVAL	

LRH IMPLEMENTATION
POND 13-14 MODIFICATIONS
P15 REUSE WELL
PLAN AND SECTIONS

PACIFICORP ENERGY
A PACIFICORP COMPANY

HYDRO

SCALE: 1/2"=1'-0" SHEET 055 116100 REV.

No.	DATE	REVISION	BY	CHK	APP	No.	DATE	REVISION	DRAWING No.	REFERENCE DRAWINGS	DRAWING No.	REFERENCE DRAWINGS

PLOT SCALE: 1 =

PLOTTED: 4/15/2009 2:40:03 PM
SAVED:
CYONET ID:

D161578

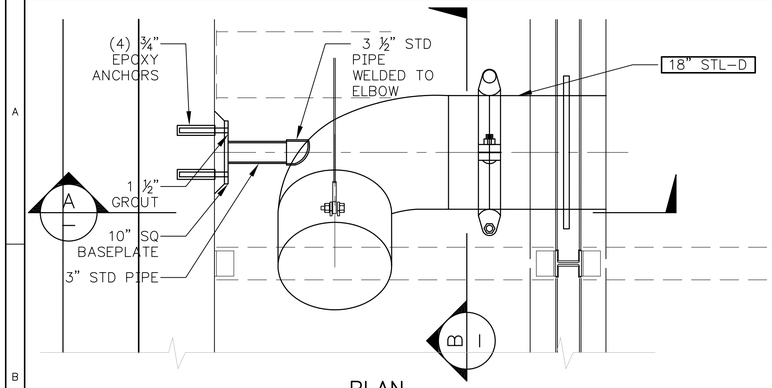

PLAN

DRAIN STAND PIPE 1/039 1/042

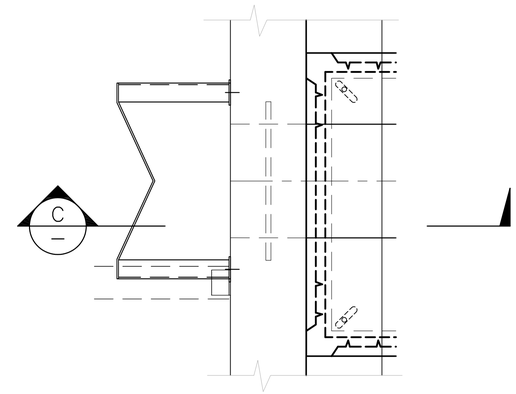

PLAN

FLOW DEFLECTOR 2/022

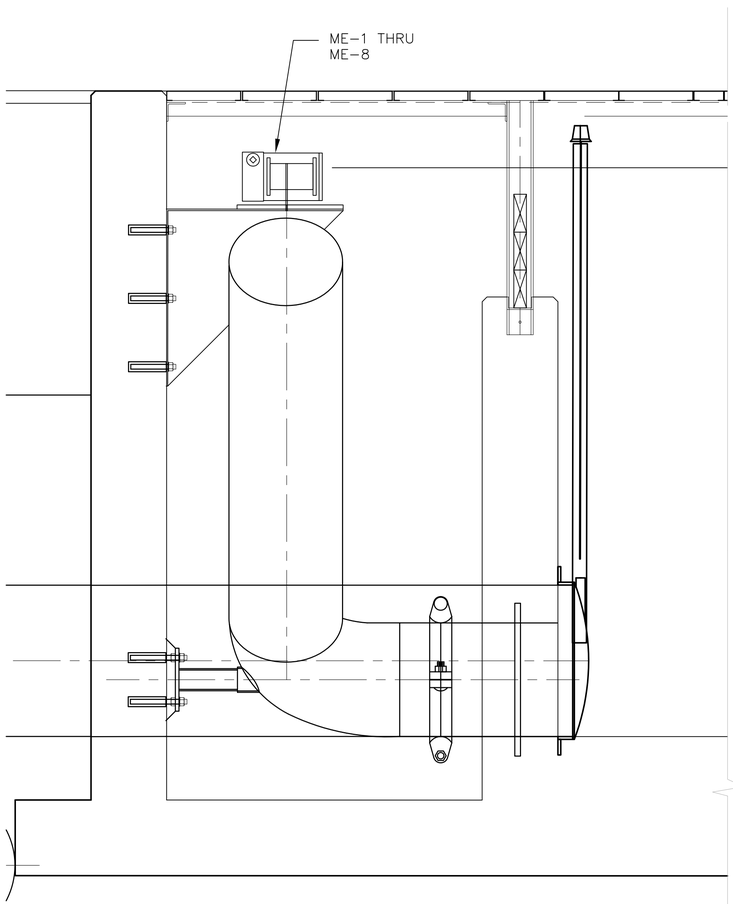

SECTION A

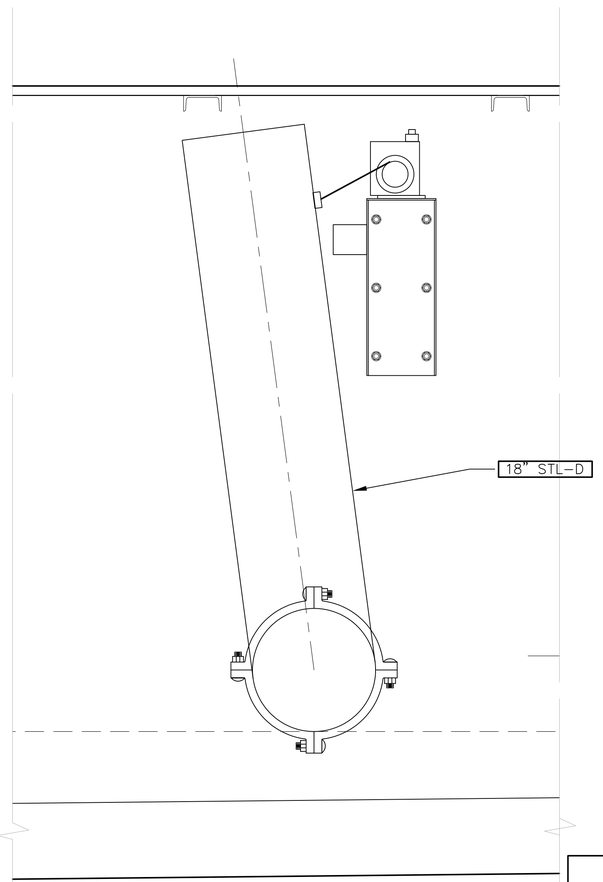

SECTION B

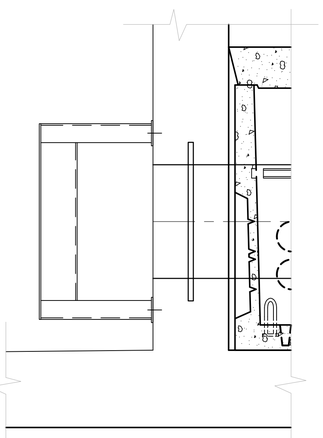

SECTION C

0 6" 1' 2' 4'
SCALE: 1/2" = 1'-0"

0 1"
BAR MEASURES ONE INCH ON ORIGINAL DRAWINGS

NOT TO BE USED FOR CONSTRUCTION

90% DESIGN SUBMITTAL

Resource Consultants, Inc.
REDMOND, WA.

SAP#	
PL#	
DATE 1-16-09	
ENG AJD/R2	DES AJD/R2
DR AJD/R2	CH
APPROVAL	

LRH IMPLEMENTATION
POND 13-14 MODIFICATIONS
MISCELLANEOUS DETAILS - I

PACIFICORP ENERGY
A PACIFICORP COMPANY

HYDRO

SCALE: 1"=1'-0" | SHEET 056 | 116100 | REV.

No.	DATE	REVISION	BY	CHK	APP	No.	DATE	REVISION	BY	CHK	APP	DRAWING No.	REFERENCE DRAWINGS	DRAWING No.	REFERENCE DRAWINGS

PLOT SCALE: 1 =

PLOTTED: 4/15/2009 2:40:29 PM
SAVED:
CYONET ID:

D161578

NOTES:

1/4" WIRE ROPE –6x19 GALVANIZED
BIRD NETTING – 15# TWINE, 2" MESH, 4 1/4" STRETCH
BY CHRISTENSEN NET WORKS OR EQUAL

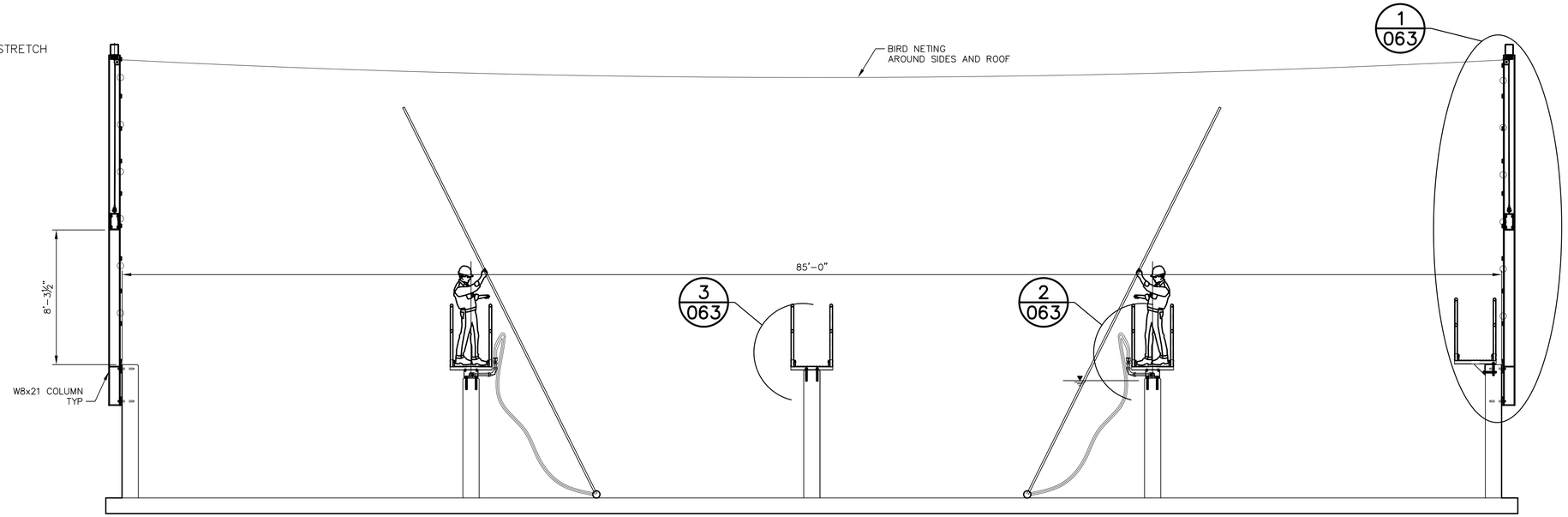

SECTION A S__

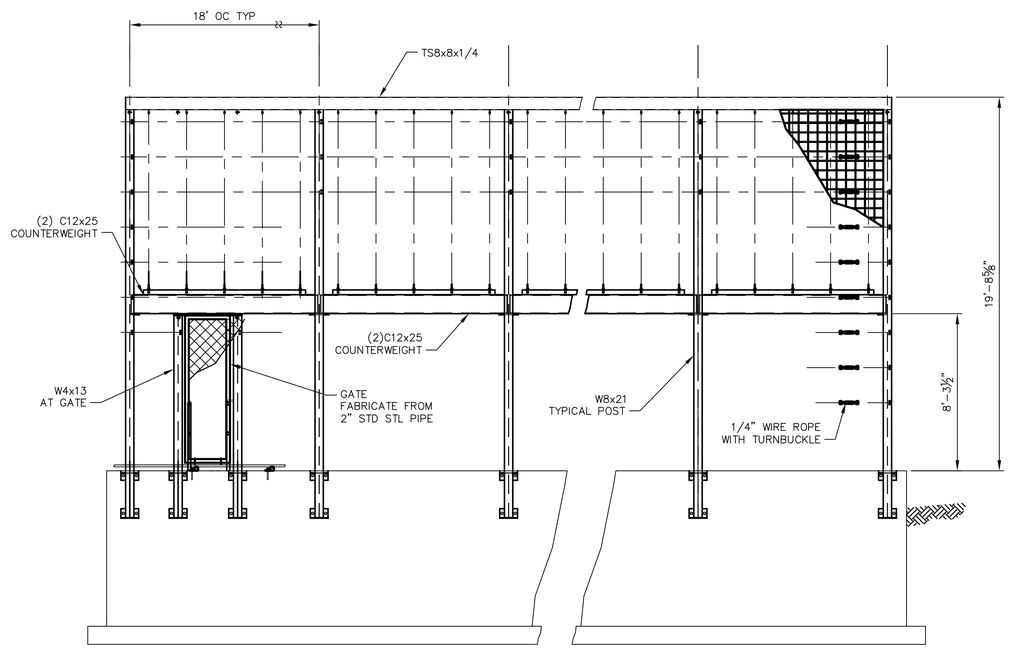

SECTION C S__

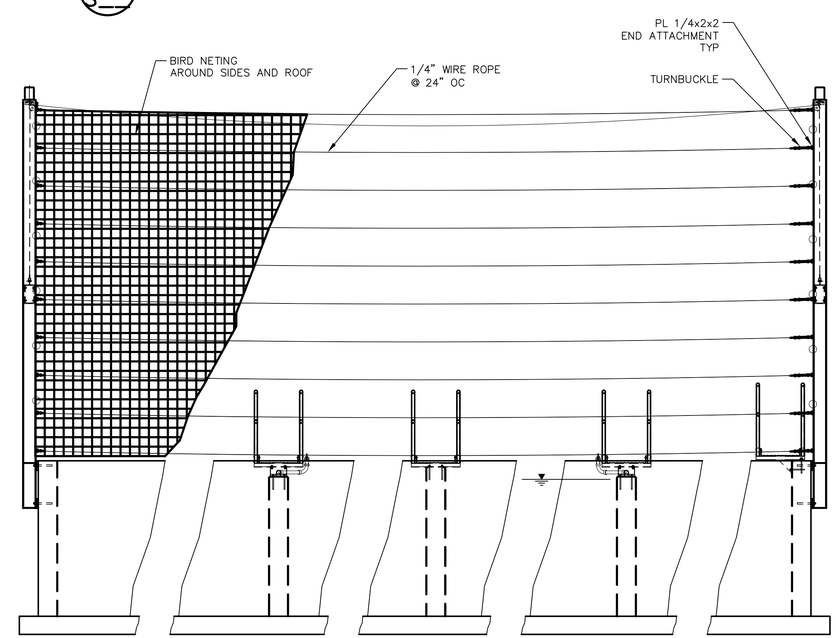

SECTION D S__

90% DESIGN SUBMITTAL

NOT TO BE USED FOR CONSTRUCTION

0 1"

BAR MEASURES ONE INCH ON ORIGINAL DRAWINGS

Resource Consultants, Inc.
REDMOND, WA.

SAP#	
PL#	
DATE 1–16–09	
ENG AJD/R2	DES AJD/R2
DR ADJ/R2	CH
APPROVAL	

LRH IMPLEMENTATION
POND 13–14 MODIFICATIONS
BIRD NETTING

PACIFICORP ENERGY
A PACIFICORP COMPANY
HYDRO

SCALE: AS SHOWN | SHEET 062 | 116100 | REV.

PLOTTED: 4/15/2009 2:40:50 PM
SAVED:
CYONET ID:
D161578

PLOT SCALE: 1 =

No.	DATE	REVISION	BY	CHK	APP	No.	DATE	REVISION	BY	CHK	APP	DRAWING No.	REFERENCE DRAWINGS	DRAWING No.	REFERENCE DRAWINGS

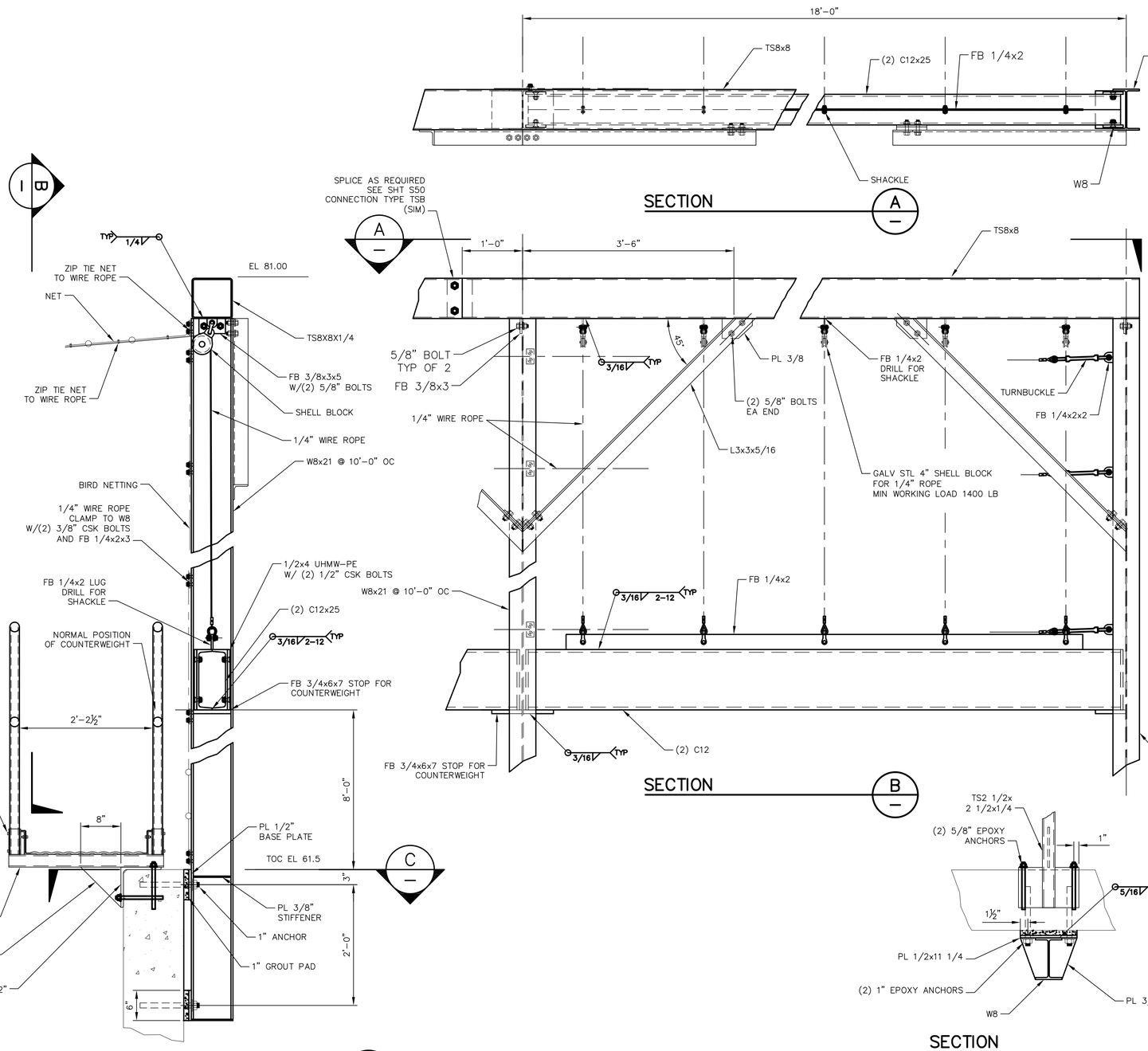

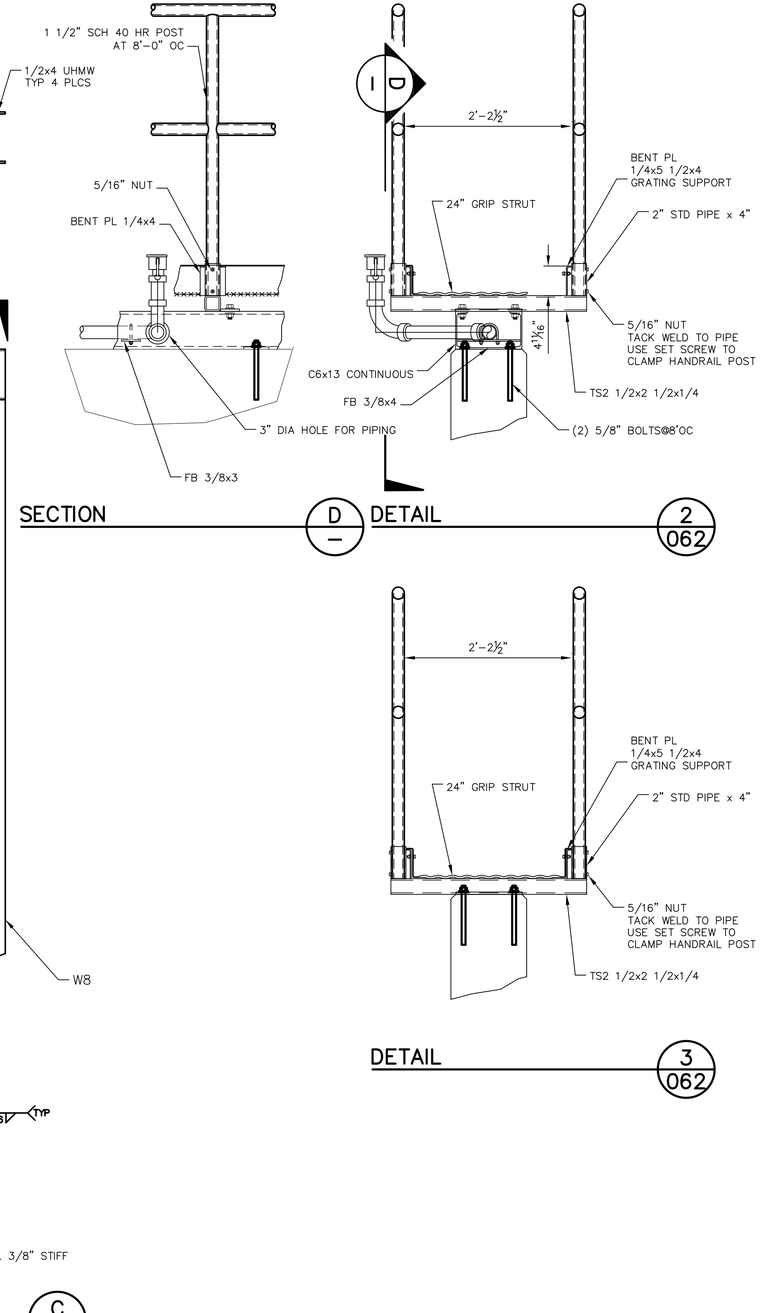

90% DESIGN SUBMITTAL

NOT TO BE USED FOR CONSTRUCTION

0 1"

BAR MEASURES ONE INCH ON ORIGINAL DRAWINGS

Resource Consultants, Inc.
REDMOND, WA.

SAP#	
PL#	
DATE 1-16-09	
ENG AJD/R2	DES AJD/R2
DR ADJ/R2	CH
APPROVAL	

LRH IMPLEMENTATION
POND 13-14 MODIFICATIONS
BIRD NETTING DETAILS

PACIFICORP ENERGY
A PACIFICORP COMPANY
HYDRO

SCALE: AS SHOWN | SHEET 063 | 116100 | REV.

REFERENCE DRAWINGS	DRAWING No.	REFERENCE DRAWINGS	DRAWING No.	BY	CHK	APP	REVISION	DATE	No.	BY	CHK	APP	REVISION	DATE	No.

PLOT SCALE: 1 =

PLOTTED: 4/15/2009 2:40:55 PM
SAVED:
CYDKEY ID:

D161578

BORDER REVISED 10/29/08 SJ&J